AGD200

Dual Axis Controller with Integrated Drives

Product Manual

agito

www.agito-akribis.com

Member of Akribis Systems group

Revision History

Version	Description	Date
3.0	Replaced dimensions and pinout diagrams with improved images. Updated voltage specifications. Updated connector information for electrical interfaces. Added safety inputs specifications and updated Safety Circuitry. Updated pulse/direction inputs (connector X10). Various, minor text corrections.	9 July 2023
2.2	Various minor text corrections. Regeneration info reorganized. System connections and wiring diagram updated. Isolated digital inputs specification corrected to 12 inputs. Specifications for bi-directional differential I/Os removed. Connector X10: General I/O-2 table updated.	27 October 2021
2.1	For general release	18 August 2021
1.0	Initial release	3 August 2020

Contact Information

Manufacturer	Agito Akribis Systems Ltd., Member of Akribis Systems Group
Address	6 Yad-Harutsim St., P.O.Box 7172, Kfar-Saba 4464103
Email	agito.info@akribis-sys.com
Website	www.agito-akribis.com

Copyright Notice

Products Rights

AGDx, AGCx, AGMx, AGAx, AGIOx, and AGLx are products designed by Agito Akribis Systems Ltd. in Israel. Sales of the products are licensed to Akribis Systems Pte Ltd. under intercompany license agreement.

Agito Akribis Systems Ltd. has full rights to distribute above products worldwide.

Disclaimer

This product documentation was accurate and reliable at the time of its release.

Agito Akribis Systems Ltd. reserves the right to change the specifications of the product described in this manual without notice at any time.

Trademarks

Agito PCSuite is a trademark of Agito Akribis Systems Ltd..

Warranty

This product is warranted to be free of defects in material and workmanship and conforms to the specifications listed in this manual, for a period of 12 months from the shipment date from factory.

Contents

1 Product Description

1.1 General Description

AGD200 is a series of dual-axis, standalone, high performance motion controllers with integrated servo amplifiers.

It is equipped with Ethernet, USB, CAN bus, RS232, and RS485 communication ports to interface with host devices such as PCs, PLCs, and HMIs. It can control any external driver via analog or digital command.

Figure 1. AGD200

At 16 kHz sampling (profiler, position and velocity control loops) frequency, AGD200 controllers are ideal for any tightly coordinated motion systems.

AGD200 has two integrated amplifiers, enabling it to drive two motors directly. It can also control a third axis through an external driver. It can drive all types of motors, such as steppers, voice coils, brushed or brushless motors, and including direct-drive linear and rotary motors.

Agito PCSuite software and IDE is used for AGD301 programing, configuration, tuning and operation. Agito PCSuite provides configuration wizard, time domain tuning and analysis, frequency domain identification and design, auto tuning and easy to use GUI for all the features of Agito controllers.

1.2 Part Numbering

Product Description	Part Number Format
Standalone Integrated Drive	AGD200-ET-2Dxx[-CCC]

ET: Ethernet

2D: 12-90VDC

xx: Continuous current rating

- 01: 1.4 Arms continuous, 2.8 Arms peak
- 02: 2.8 Arms continuous, 5.6 Arms peak
- 05: 5.6 Arms continuous, 11.2 Arms peak

CCC: Optional customization number

Example: AGD200-ET-2D02 is a standard variant for 2.8 A_{rms} continuous current, 5.6 A_{rms} peak.

1.3 System Design

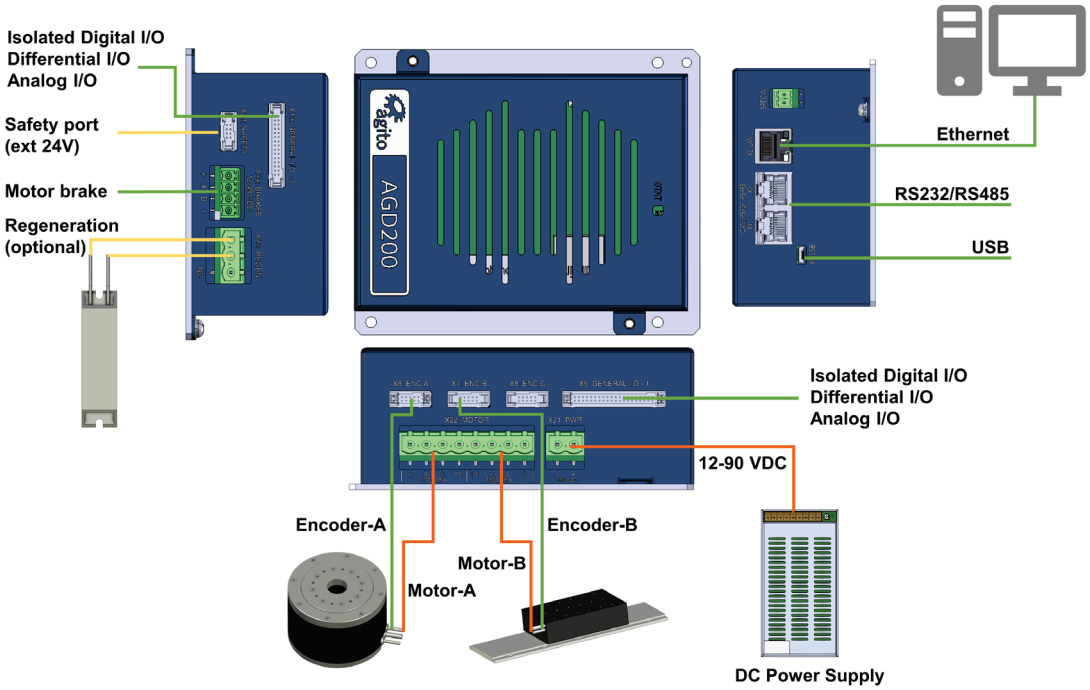

Figure 2. System connections and wiring

1.4 Technical Specifications

Electrical Specifications

Feature	AGD200-ET-2D01	AGD200-ET-2D02	AGD200-ET-2D05
Number of axes	2 (3rd axis with external amplifier)		
Nominal supply voltage	12–90 VDC		
Minimum supply voltage	11 VDC		
Maximum supply voltage	95 VDC		
Logic power supply (optional) *	12–36 VDC		
Continuous output current (Internally limited by firmware)	1.4 A_{rms}	2.8 A_{rms}	5.6 A_{rms}
Peak output current (Internally limited by firmware)	2.8 A_{rms}	5.6 A_{rms}	11.2 A_{rms}
Output power @ 90 VDC	0.12 kVA	0.24 kVA	0.48 kVA
Peak current time	2 sec		
Output frequency	0–599 Hz		
Isolated digital inputs	12		
Isolated digital outputs	4		
Differential digital inputs	8		
Differential digital outputs	4		

Feature	AGD200-ET-2D01	AGD200-ET-2D02	AGD200-ET-2D05
Analog inputs	4		
Analog outputs	4		
Brake outputs	2		
Encoder ports	3		
Motor types	Voice coil, brushed or brushless linear or rotary motor. 2-phase steppers (open and closed loop, micro-stepping)		
Communication	Ethernet, CAN RS232, RS485, USB		
PWM frequency	16 kHz		
Power supply to external devices	Voltage: 5V Overall max. current: 1.5A		

* Supported as of product hardware Rev 4 (X1 connector labeled BKP PWR)

Encoder Ports Specifications

Feature	Specification
Encoder types	Ports 1,2: Incremental AqB, Sin/Cos, Absolute EnDat 2.2, Absolute BiSS-C Port 3: Incremental AqB, Absolute EnDat 2.2, Absolute BiSS-C
Power supply to encoder	0.5 A per encoder port
Max. cable length	40 m
Incremental encoder	Hardware: Differential RS422/RS485 Max. input frequency: 6.25 MHz Termination: 120 Ω Commutation: Auto-phasing, Hall sensors
Sin/Cos encoder (on Main Encoder port only)	Hardware: Differential RS422/RS485, 1V pkp @2.5V Max. input frequency: 250 kHz Termination: 120 Ω Max interpolation: 13 bits (x 8192) Commutation: Auto-phasing, Hall sensors
Absolute BiSS-C	Hardware: Differential RS422/RS485, clock (MA), data (SLO) Clock frequency: 2 MHz Max. position bits: 32 bits Commutation: Auto-phasing, by absolute offset
Absolute EnDat 2.2 *	Hardware: Differential RS422/RS485, clock, data Clock frequency: 2 MHz Max. position bits: 32 bits Commutation: Auto-phasing, by absolute offset
Hall sensors	Opto-isolated 5V with internal or external power supply

* EnDat 2.2 is not supported in the standard FPGA version due to space constraints. The default production FPGA supports BiSS-C only. If you are interested in a FPGA version that supports EnDat 2.2, contact Technical Support.

I/O Specifications

Feature	Specification
Power supply for optically isolated I/Os	Voltage: 5–28 VDC
Optically isolated digital inputs	Type: PNP/NPN Propagation delay: 10 µs Max. frequency: 100 kHz Functionality: limit switches, home, captures, start motion, gain scheduling, and others
Optically isolated digital outputs	Type: PNP/NPN Max current: 0.5A (for NPN type), 0.3A (for PNP type) Propagation delay: 10 µs Max. frequency: 100 kHz Functionality: alarm, in-position, event (PEG), and others
Differential digital inputs	Hardware: Differential RS422 Termination: 120 Ω Propagation delay: 100 ns Max. frequency: 5 MHz Functionality: Position lock (capture), pulse and direction, AqB encoder following
Differential digital outputs	Hardware: Differential RS422 Termination: NA Propagation delay: 100 ns Max. frequency: 5 MHz Functionality: Position event, encoder emulation, alarm, statuses, and others.
Analog inputs	Operational voltage: ±12V Resolution: 12 bit (16 bit with extension board)
Analog outputs	Operational voltage: ±12V Resolution: 16 bit
Safety inputs	2 independent inputs Voltage: 5–28 VDC
Static brake output	Operational voltage: 24V Maximum current: 3A

Mechanical Specifications

Feature	Specification
Unit dimensions (max)	H=107 mm, W=50 mm, D=88 mm
Package dimensions	H=150 mm, W=120 mm, D = 120 mm
Unit weight	0.2 kg
Shipping weight	0.24

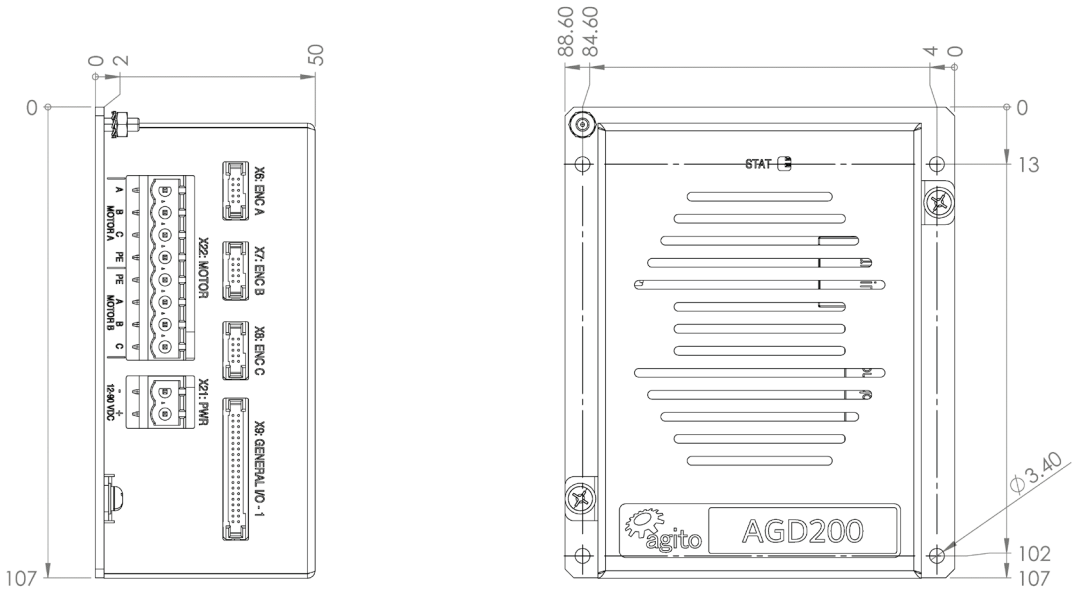

Figure 3. Product Dimensions (mm)

1.5 Motion Control Specifications

Motion Control Specifications

Feature	Specification
Key Features	▪ Encoder error mapping: 1D, 2D or 3D ▪ Auto-loop shaping (auto-tuning) ▪ Frequency domain system identification and modeling ▪ Flexible gain scheduling based on motion conditions ▪ Position lock and event ▪ Advanced Auto-tuning algorithm in frequency domain ▪ Force control and mode switching
Advanced Features	▪ UltraPrecision mode (UPM) ▪ Input-shaping ▪ Profile-shaping ▪ Machine vibration control with external sensor ▪ Spring and friction compensation ▪ Active-yaw gantry control
Control Sampling Rate	16 kHz (profiler, position, velocity, optional force, current)
Motion Modes	▪ Point-to-point ▪ Repetitive ▪ CNC sequential contour (G-codes) ▪ Vector and tracking motion modes ▪ Jog ▪ ECAM ▪ Gearing ▪ Joystick ▪ Handwheel ▪ Pulse and direction
Operational Modes	▪ Position ▪ Velocity ▪ Force ▪ Current (torque) modes
Motion Modes Switching	Motion parameters, such as speed, acceleration, deceleration, and target position can be all modified on-the-fly
Programming Interfaces	▪ Standalone user programs ▪ Multi-threaded with priority setting environment, up to 8 threads ▪ Execution time: 50 low script commands in 1 millisecond ▪ High level C-language-like script programming language integrated in Agito PCSuite
IDE and Host Interfaces	▪ Windows PC Suite IDE and configuration software ▪ Windows .NET API available in NuGet package manager ▪ Linux .NET API ▪ The API can also be used in MATLAB, LabVIEW and other environments compatible with Windows .NET ▪ Standard TCP/IP communication ▪ ASCII string commands or binary CAN format

1.6 Environmental Specifications

Environmental Specifications

Feature	Specification
Operating temperature	0°C to 50°C
Storage temperature	-20°C to 70°C
Operating humidity	< 90%
Storage humidity	< 40%
Pollution degree	2
Vibration	1G @ 150 Hz according to IEC 60068-2-6
Operating conditions	Protection class: IP20

2 Safety

2.1 Safety Symbols

Safety symbols indicate a potential for personal injury or equipment damage if the prescribed precautions and safe operating practices are not followed.

The following safety symbols are used in the product documentation.

Safety Symbols

Symbol	Meaning	Description
	Hazardous voltage	Indicates hazards arising from dangerous voltages.
	Earthing PE (protective earth)	Identifies any terminal which is intended for connection to an external conductor for protection against electric shock in case of a fault, or the terminal of a protective earth (ground) electrode.
	Caution, hot surface	Indicates the marked item can be hot and should not be touched without taking care.

2.2 Safety Guidelines

To achieve optimum and safe operation of the product, it is important to follow the safety procedures specified in this manual.

Only qualified personnel may install, maintain, or repair the product. Before starting installation, maintenance or operation, ensure that all system components are connected to protective earth ground (PE).

The PE wire must be colored green-yellow, in accordance with local electrical wiring standards.

This product contains electrostatic-sensitive components. Proper handling procedures must be observed to avoid damage to the product.

To avoid electric arcing and hazards, never connect or disconnect any connector while the power source is on.

The maximum power supply voltage connected to the product must comply with the ratings provided in this manual.

Always disconnect the power cables before servicing the product.

Pay attention to safety symbols on the product or in the manual. Follow proper safety precautions when installing or operating the product.

Attention

All power connectors must be securely tightened before any operation.

Warning

Connectors X22, X21, X24 and X25 are high power. Do not touch these connectors when the product is powered.

Attention

Do not attempt to hinder or override the product's or system's fault detection or protection circuits. You must determine the cause of a fault and correct it before you attempt to operate the system. Failure to correct the fault could result in personal injury and/or damage to equipment.

2.3 Compliance

Standards Compliance

Directive	Standard
2014/35/EU EC Machinery Low Voltage Directive	IEC 61800-5-1:2007/A1:2017
2014/30/EU Electromagnetic Compatibility Directive (EMC)	IEC 61800-3-2017
RoHS 2011/65/EU + (EU)2015/863	EN 50581:2012

This product is intended to operate in a machine or equivalent end-product. The machine or end-product must comply with any necessary safety standard as typically required for the same type of machine or end-product. It is the responsibility of the machine or end-product manufacturer to ensure the final machine or end-product meets the requirement of any safety and EMC regulations.

File name: EU Declaration of Conformity - AGD200 _v1.2.docx
Date: March 8, 2021
Version: 1.2

Agito Akribis Systems Ltd.
www.agito.co.il

EU Declaration of Conformity

Products:

- AGD200: 2-axis controller with integrated servo amplifiers
- AGC300: Motion controller: Same controller as in AGD200, without the servo amplifiers.
- The AGC300 is a reduced version of the AGD200 that was tested. There are no servo amplifiers in this product. Therefore, the Safety and EMC have less impact than in the tested products. For this reason, we declare that that the AGC300 meets the requirements of the Directives.

P/N:	Engineering P/N in Reports	Description
AGD200-ET-2D01	AG300-DRV01-2A	2-axis Drive – 90Vdc, 2A (1.4 Arms) continuous current
AGD200-ET-2D02	AG300-DRV01-2A	2-axis Drive – 90Vdc, 4A (2.8 Arms) continuous current
AGD200-ET-2D05	AG300-DRV01-2A	2-axis Drive – 90Vdc, 8A (5.6 Arms) continuous current

Name and address of manufacturer:

Agito Akribis Systems Ltd. 6 Yad-Harutsim St.,P.O.Box 7172,
Kfar-Saba 4464103, Israel
Tel: +972-9-8909797 Fax: +972-9-8909796

This declaration is declared under the sole responsibility of the manufacturer

The products mentioned above are in accordance with EC Machinery Low Voltage Directive 2014/35/EU and EU Electromagnetic Compatibility Directive (2014/30/EU).

Conformity of the products designated above is under the following IEC standards:

Directive	Standard
2014/35/EU EC Machinery Low Voltage Directive	**IEC 61800-5-1:2007/A1:2017**
2014/30/EU Electromagnetic Compatibility Directive (EMC)	**IEC 61800-3-2017**
RoHS 2011/65/EU + (EU)2015/863	**EN 50581:2012**

Certification body: TUV Rheinland
Low Voltage Directive test report #: 50224307 001
EMC Directive test report #: 50224310 001

Signed for and on behalf of the above-named manufacturer

Place and date of issue:	Israel	8 March 2021
Name, function:	Eyal Sapir	Managing Director
Signature:		

AGITO-AKRIBIS SYSTEMS LTD
514498047

3 Installation

3.1 Unpacking and Packing

Save the original box and packing materials in case you need to pack and return the product to the manufacturer.

To unpack the product:

1. Carefully remove the product from the box and the packing materials.
2. Visually inspect the product to ensure that there is no damage. If any damage has occurred, report it immediately to the carrier that delivered the package.
3. After unpacking, locate the part number label on the product, and make sure it matches the product your ordered, and that the voltage meets your specific requirements.

3.2 Mounting

Warning – Metal Base Plate for Heat Dissipation

The product is supplied with the mounting plate built into the heatsink. At full power operation, the heat sink can be quite warm, around 50°C. It is recommended to mount the product on a large metal panel to help dissipate the heat generated in the product.

3.2.1 Mounting the AGD200

The heatsink on the back of the AGD200 includes 4 holes for mounting the unit. The AGD200 can be mounted vertically (book mounting) or horizontally (shelf mounting).

The AGD200 is mounted using 4 M4 screws. It is important to mount the product on metal panel for both grounding and secure connections.

The heatsink of the AGD200 is electrically conductive and serves as the protective earth (PE) ground of the product. However, it is critical to ensure the PE screws are electrically conducting between the PE of AGD200 and the PE of main power supply in the system.

All cables connected to the product must be securely constrained to avoid vibration that causes stress concentration at the cables or connectors which may result in breakage of electrical conductivity.

3.2.2 Mounting Multiple Motion Controllers

When mounting multiple units within a cabinet, clearance between units must be at least 40 mm. In addition, top and bottom clearance must be at least 40 mm.

Ambient temperature in the cabinet must not exceed 50°C

If controllers are mounted on a backplane, the backplane temperature must not exceed the 50°C.

It is recommended to install a cooling fan at the bottom of the cabinet for best circulation.

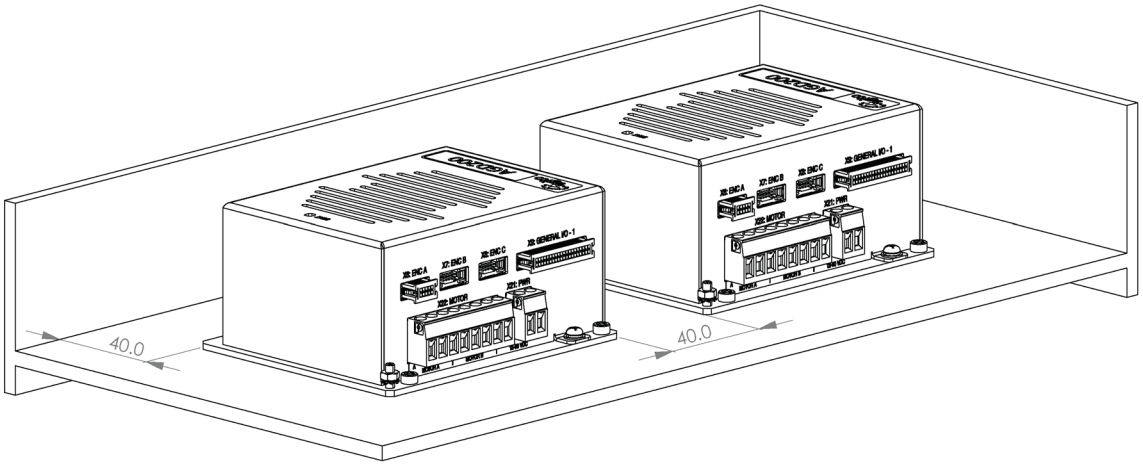

Figure 4. Horizontal mounting multiple amplifiers within cabinet

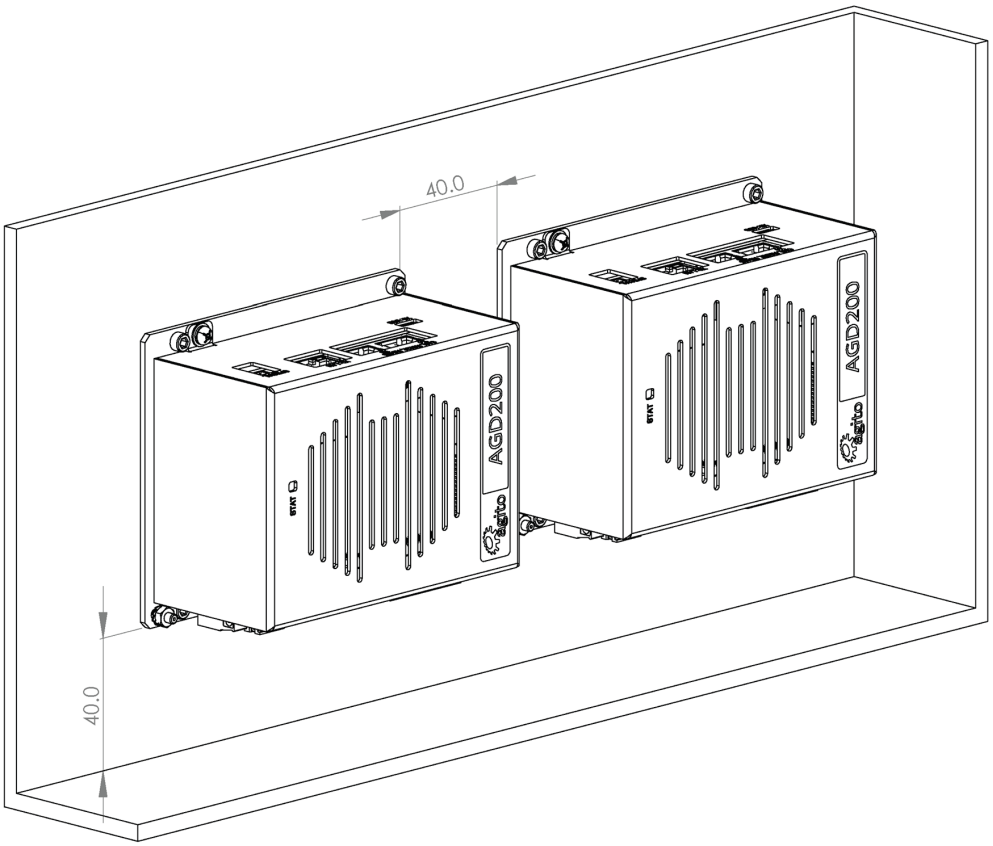

Figure 5. Vertical Mounting multiple amplifiers within cabinet

3.3 Electrical Installation

3.3.1 Power Wiring

AGD200 is designed to operate on voltage ranging from 12 VDC to 90 VDC, which is supplied to bus voltage, to motor, and to logic power.

3.3.2 Regeneration

AGD200 uses the main DC power input to output a controlled electrical power through the phases of the motor. The motor converts this electrical power to a mechanical power that moves the load. During motor deceleration and stopping, the inertia of the load drives the movement of the motor, not the servo drive. Due to back EMF, the motor acts as a generator and returns energy to the DC bus supply, which causes the DC bus voltage to increase to undesirable level.

Maximum allowable DC bus voltage is 90 VDC. To prevent excessive DC bus voltage, a regeneration resistor can be connected to the AGD200 X25 connector to dissipate excess regenerated energy, and prevent it from reaching undesirable levels. The regeneration resistor starts to dissipate energy at 85 VDC. Regeneration voltage threshold parameters are software configurable and can be modified according to the motor's maximum voltage specification.

AGD200 controllers have one regeneration resistor input for both axes. Regeneration power of two motors must be taken into consideration when selecting the resistor.

Warning

DC Vbus is monitored, and motors will be disabled if voltage is too high. However, there is no protection against the connection of an excessive voltage power supply that will damage the product.

For connection details, refer to the section *Interface X25: Regeneration.*

Important Notes

- The regeneration feature, once enabled, is always active, regardless of the motor status (enabled/disabled).
- Current will flow in the regeneration resistor depending on the values of RegenOn and RegenOff, and the power supply voltage.
- There are no current or power protections to protect the regeneration resistor or the internal MOSFET.
- Be sure to set the suitable regeneration parameters for the supply voltage and the external regeneration resistor.
- Plug in the regeneration resistor only after all parameters are set properly, and always when the controller power is off.
- Let the regeneration resistor cool down before touching it. Unplug it only when the controller power is off.
- During development, if the supply voltage is to be modified, first disconnect the regeneration resistor and, before reconnecting the regeneration resistor, be sure to adjust the regeneration parameters to match the new supply voltage.
- We recommend adding external protections (such as PTC) to protect the regeneration resistor.

3.3.3 Grounding

It is recommended to install the AGD200 on a metal plate for better power dissipation, reduced EMI, and grounding connection. Make sure the plate is not painted.

The heatsink of the AGD200 is electrically conductive and serves as the protective earth (PE) ground of the product. However, it is critical to ensure the PE screws are electrically conducting between the chassis connection screw of AGD200 and the PE of main power supply in the system.

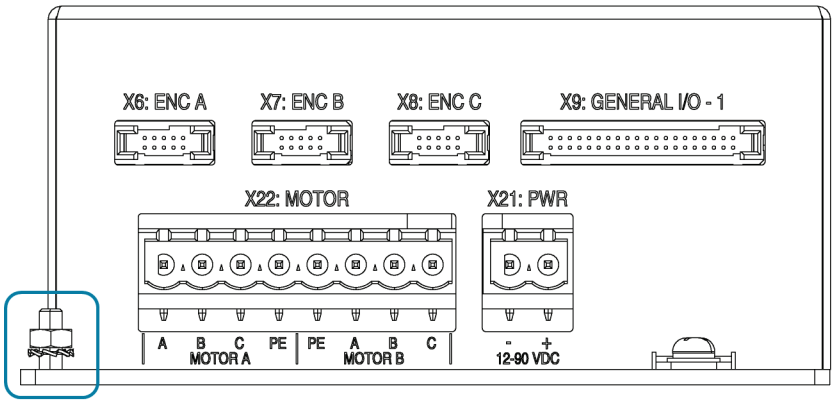

Figure 20: Chassis connection screw

Note: Within the product, the chassis is not connected to the power supply ground.

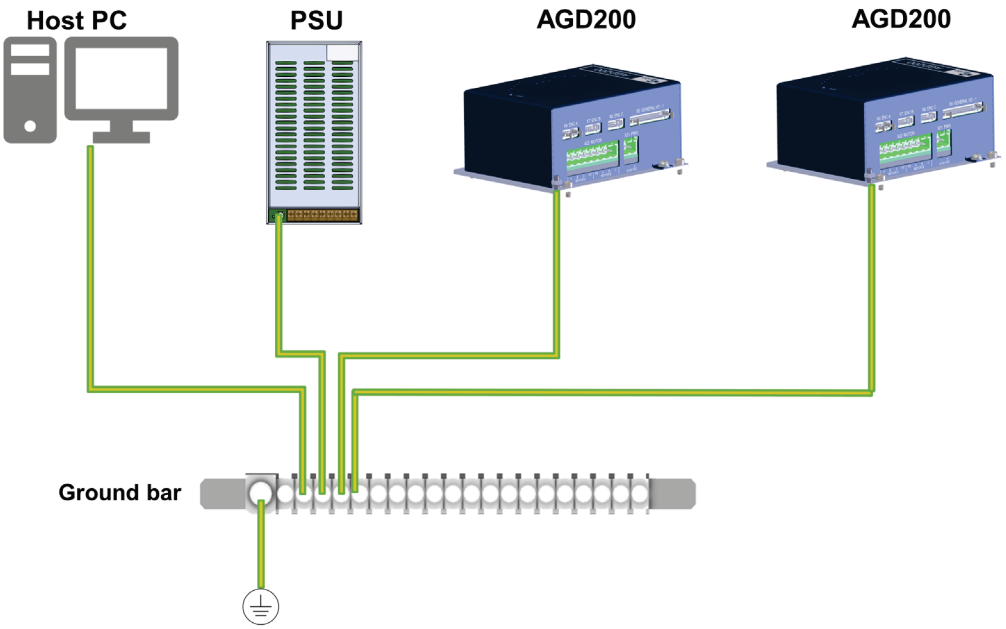

Figure 6. System grounding

Ground Domains

The following table shows the ground domains in the AGD200 system:

- **GND**. Reference voltage for digital/analog circuits and signals.
- **PGND**. High voltage ground domain (internal).
- **General**. Usually at DC potential close to GND, but not connected internally.

Ground Domains

	Ground Domain	Notes
DC power input	GND (digital ground)	External DC power supply
Isolated digital inputs/outputs	General	Isolated
Differential digital inputs/outputs	GND	Not isolated. To controller/PLC.
Analog inputs/outputs	GND	Not isolated
Brake control output	General	Isolated. External DC power supply.
Regeneration output	PGND	
Ethernet communication	General	Isolated
Other communication	GND	Not isolated (unless otherwise stated in manual).

Grounding Policy

Grounding of the product must comply with the following guidelines:

- The enclosures and other external parts that may be touched by the user must be in the safe domain.
- The AGD200 must be connected to protective earth (PE) and connected to the building's ground. PE is protected with an earth-leakage circuit breaker (ELCB); hence it is safe to touch. Refer to Figure 6.
- PGND is connected directly to mains wires, hence it is just as dangerous as mains to the user.
- All shielded cables, including but not limited to motor, encoders, and power input, have their shield connected to PE as part of the external metal enclosure.
- It is critical to avoid ground loops in the system. A ground loop allows currents to return by two or more different paths, causing electromagnetic interference or even damage to wires.
- The system designer must carefully examine all GND connections in the system to ensure that no loops are created, and that all GND-referenced signals have a GND wire nearby (for both return currents and common mode voltage).

3.4 Electrical Interfaces

This section provides a detailed description of all the power and signal interfaces of the product.

3.4.1 Interface X21: Main Power

Connector X21 is used to supply 12–90 VDC to the AGD200.

The input voltage is directly connected to the amplifier power bridge, to drive the motors. In addition, it is used to generate internal logic power to the controller board and to external devices such as encoders and I/Os.

The AGD200 is fully operational with this single power supply.

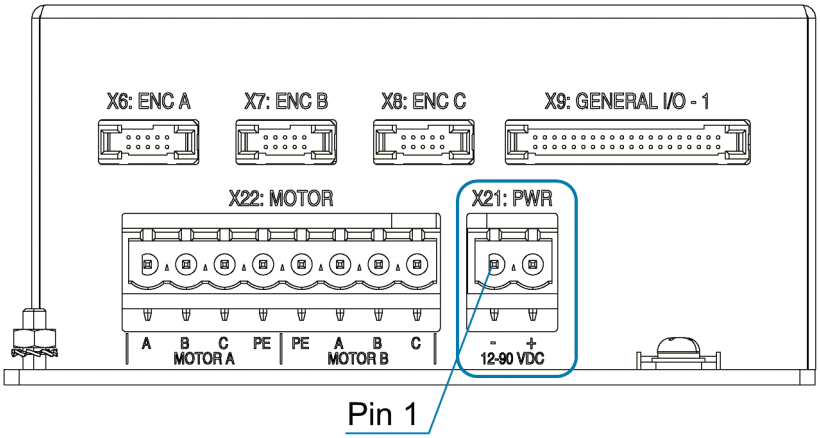

Figure 7: Main power connector

Connector X21: PWR

Pin #	Name	Description
1	Power GND	Power GND
2	Main Power	Motor power input: 12V to 90V, up to 16A continuous

Mating connector options	Degson Phoenix Contact	2EDGKF-5.08-02P-14-1000A 1779987
Pitch	5.08 mm	
Wiring	14–18 AWG, insulation rated for 300V	

Warning

The AGD200 does not include protection against inversed polarity at the input power. Make sure you connect power input according to the connector pinout below.

Warning - Hot plugging is not supported!

Plug or unplug the power connector only when power is off. Plugging the power connector when power is on may cause power surges through connected devices and possibly damage them.

Optional schemes for isolated power supplies

The AGD200 can support fully isolated power supplies, one for the power circuitry to drive the motor, and one for the digital logic. If you are interested in such a scheme, contact Technical Support.

3.4.2 Interface X1: Backup Power

Warning

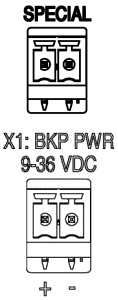

Do NOT use this port to connect logic power if the interface is marked **SPECIAL** (older product version). This may cause permanent damage to the product.

You may use this port to connect logic power if the interface is marked **BKP PWR**.

Connector X1 provides optional backup (9–36 VDC) power for the logic components, and enables communication with the controller when interface X21: PWR is disconnected.

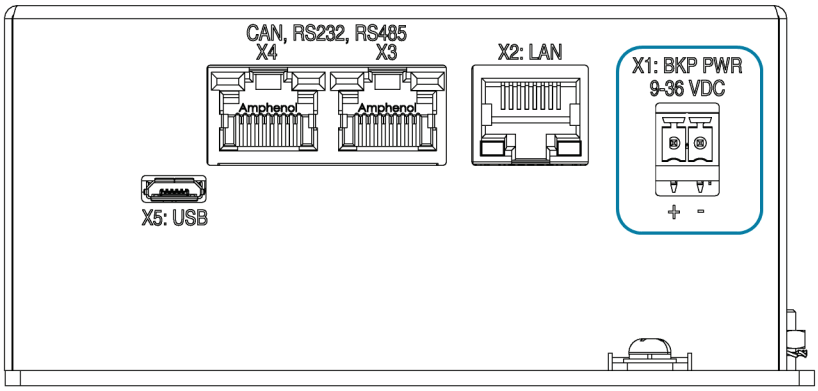

Figure 8: Backup power connector

Connector X1: BKP PWR

Pin #	Name	Description
1	+ Backup/logic power	9–36 VDC – backup/logic power, up to 50W
2	- Backup power GND	Ground – backup/logic power return

Mating connector options	Degson Phoenix Contact	15EDGK-3.5-02P-14-00A 1840366
Pitch	3.5 mm	
Wiring	16–28 AWG, insulation rated for 160V	

Warning - Hot plugging is forbidden!

Plug or unplug the power connector only when power is off! Plugging the power connector when power is on may cause power surges through connected devices and possibly damage them.

3.4.3 Interface X22: Motor

Connector X22 serves to supply power to two motors (Motor A, Motor B), which can be a 3-phase brushless motor, a single phase brushed motor or voice coil motor, or a stepper motor. Two different types of motors can be connected to Motor A and Motor B. Be sure to follow the wiring specifications for each motor.

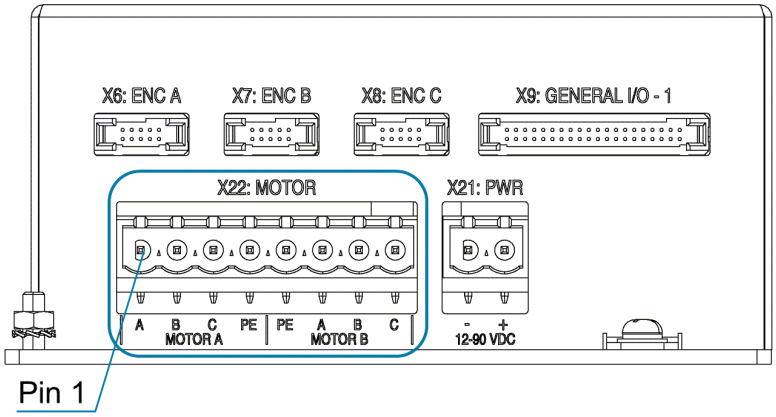

Figure 9: Motor connector

Connector X22: MOTOR

Pin #	Label	Brushless Motors	Brushed or Voice Coil Motors	2 Stepper Motors
1	A	Motor A Phase A	Motor A Phase +	Motor A Phase 1 +
2	B	Motor A Phase B	Motor A Phase -	Motor A Phase 2 +
3	C	Motor A Phase C	Not connected	Motor A Phases 1- and 2-
4	PE	PE	PE	PE
5	PE	PE	PE	PE
6	A	Motor B Phase A	Motor B Phase +	Motor B Phase 1 +
7	B	Motor B Phase B	Motor B Phase -	Motor B Phase 2 +
8	C	Motor B Phase C	Not connected	Motor B Phases 1- and 2-

Mating connector options	Degson Phoenix Contact	2EDGKF-5.08-08P-14-1000A 1781043
Pitch	5.08 mm	
Wiring	14–18 AWG, insulation rated for 300V	

Notes:

- Brushless/Brush/Voice Coil Motors – PE: Use for motor ground and cable shield.
- Stepper Motors – Pin 3/Pin 8: Two motor wires are connected to a single pin of the connector.

Stepper voltage range

A bipolar stepper motor has two independent phases (a total of 4 wires). When using the AGD200, you need to connect the (-) wire of both phases together, into pin 3 of the connector (for motor A) or pin 8 (for motor B).

This connection implies a limitation of the voltage that will be applied to the stepper. For example, if the power supply to the unit is 24V, each phase of the stepper motor will be limited to 12V.

With suitable selection of the power supply this should impose no limitation on the stepper motor operation.

3.4.4 Interface X23: Safety

Connector X23 is used for the hardware safety function that disables power to the motor.

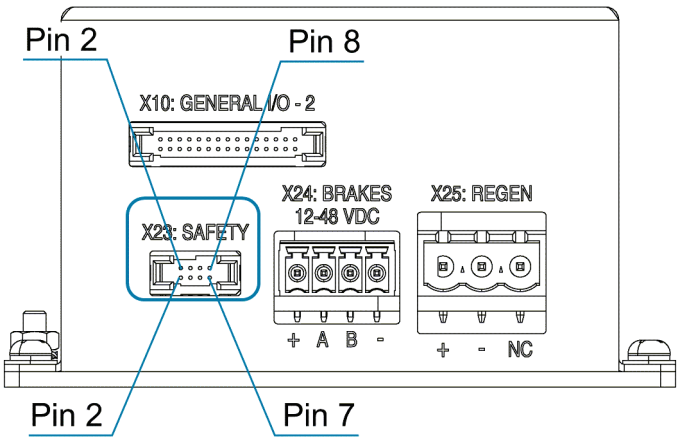

Figure 10. Safety connector

Connector X23: SAFETY

Pin #	Name	Description
1	Safety_Input_1-	Safety_Input_1 negative input
2	Safety_Input_1+	Safety_Input_1 positive input
3	Safety_Input_2-	Safety_Input_2 negative input
4	Safety_Input_2+	Safety_Input_2 positive input
5	Safety_Feedback-	Safety_Feedback negative (emitter) output
6	Safety_Feedback+	Safety_Feedback positive (collector) output
7	5V	5V supply for safety circuits
8	GND	GND

Mating connector options	Samtec ISDF-04-D-M and CC03R-2830-01-G
Wiring	28/30 AWG, insulation rated for 100 V

Disabling Safety function

If the Safety function is not required in your application, you can disable it by using a jumper plug from Agito. Part number: C-AGD200-SFT

Safety Circuitry

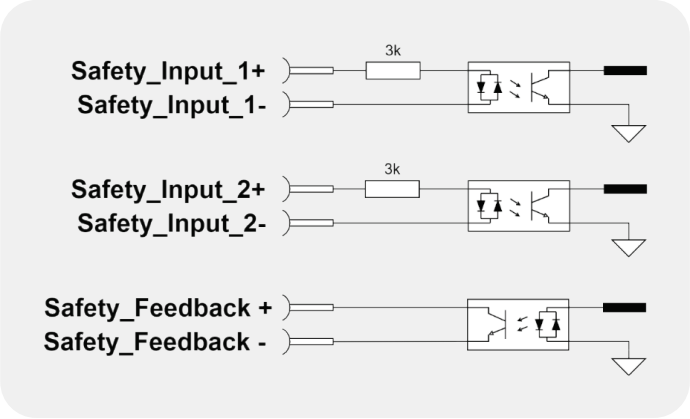

Figure 11. Safety connector

- The safety circuitry consists of two input channels, labeled Safety_Input_1 and I Safety_Input_ 2. Both input channels support a voltage range of 5 VDC to 24 VDC. It is recommended to use 24 VDC for the input voltage as it provides better electromagnetic interference (EMI) immunity.
- Safety_Input_1 and Safety_Input_2 function independently, thus providing safety redundancy. Each one can disable the power to the motor.
- Both Safety_Input_1 and Safety_Input_2 disable the power to the motor through hardware circuitry, without any software intervention.
- Both Safety_Input_1 and Safety_Input_2 are defined with a positive pin (+) and a negative pin (-). However, the opto-coupler at the Safety_Input has two input diodes, which enable operation at “positive” or “negative” input voltage. The input is activated when current is sufficient at one of the input diodes, regardless of the current direction. This enables NPN or PNP connection to the safety inputs.
- The Safety_Input protection logic is designed so that both Safety_Inputs must be powered to enable motor operation. Leaving a Safety_Input disconnected prevents motor operation. This logic is required to ensure that a disconnected safety cable is considered an unsafe condition by the control unit. When sufficient current is driven through a Safety_Input, the state of this input is Safe. When insufficient current is driven through a Safety_Input, the state of this input is Unsafe.
- The two Safety_Inputs must be in the Safe state to enable motor operation.
- Both Safety_Input_1 and Safety_Input_2, although acting on the drive hardware directly, are also monitored by the controller software. The controller software generates a feedback signal to the user (Safety_Feedback), which is also an isolated signal. This feedback is generated by the software, and is activated if at least one of Safety_Input_1 or Safety_Input_2 signals is in the Unsafe state.
- The electrical characteristics of the Safety_Input_1 and Safety_Input_2 are identical to those of all other isolated digital inputs of the controller.
- The safety inputs implemented in the product are currently pending certification Functional Safety Standards.

3.4.5 Interface X24: Brakes

Some motors may have a static brake, which is engaged when the motor is not enabled. Connector X24 is used for this functionality.

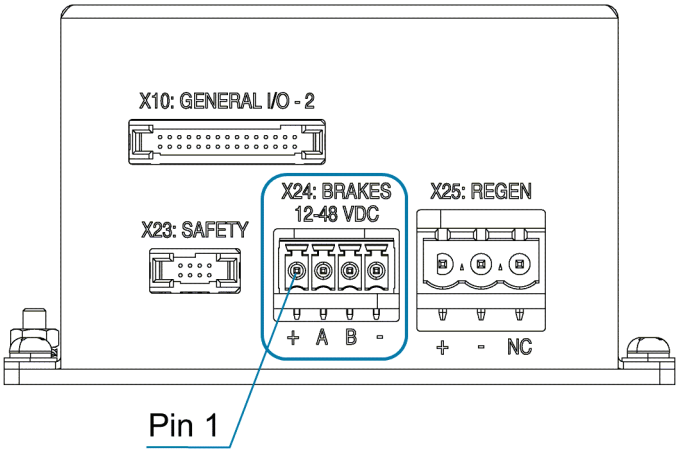

Figure 12. Static brakes connector

Connector X24: BRAKES

Pin #	Name	Description
1	Brake_Power	Power supply for the brake isolated circuits in the controller. Up to 48 VDC.
2	A_Static_Brake	Static brake output for motor A. Open-drain output with built-in flyback diode to the Brake_Power for direct connection into inductive load. Up to 4A operation.
3	B_Static_Brake	Static brake output for motor B. Open-drain output with built-in flyback diode to the Brake_Power for direct connection into inductive load. Up to 4A operation.
4	Brake_Power_RTN	Return for Brake_Power.

Mating connector options	Degson Phoenix Contact	15EDGK-3.5-04P-14-00A 1840382
Pitch	3.5 mm	
Wiring	18–20 AWG, insulation rated for 160V	

Brakes Circuitry

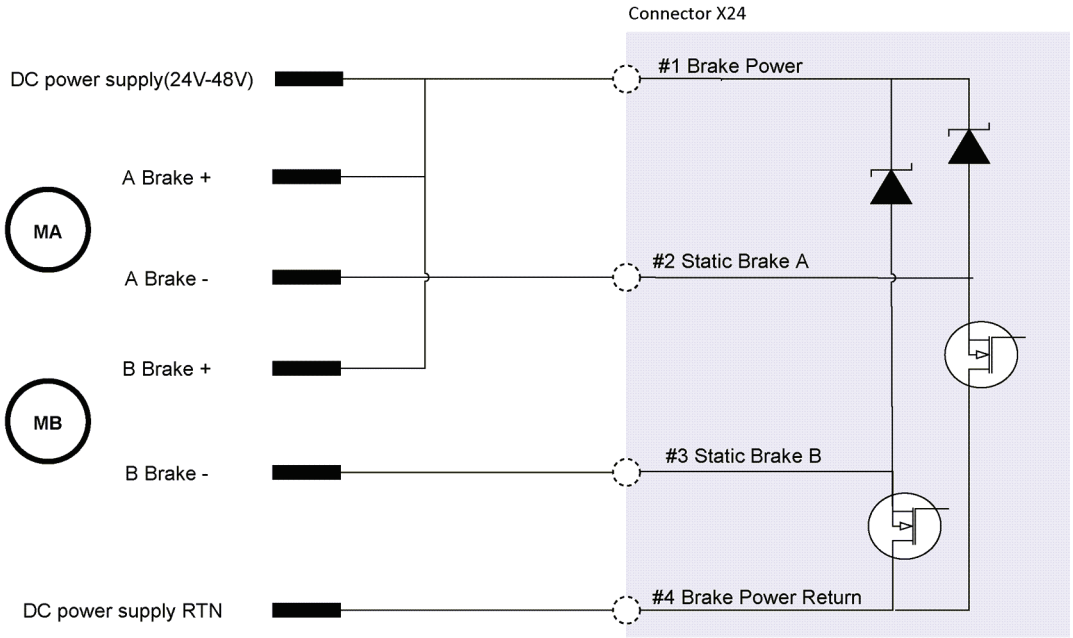

Figure 13. Static brakes

- An external 24–48 VDC power supply is required to provide power to the motor brake.
  Connect the Motor Brake+ wire directly to the power supply positive terminal.
  Connect the Motor Brake- wire to X24 pin 2 for motor A brake, or to pin 3 for motor B brake.
- AGD200 includes flyback diodes; therefore, an external diode is not required.
- Motor brake functionality can be configured in Agito PCSuite to automatic mode: Brake released on motor on, and Brake engaged on motor off.

3.4.6 Interfaces X6/X7/X8: Encoders

X6, X7 and X8 are identical connectors. Each one serves as an interface to a single encoder.

Typically, X6 and X7 are used for the motor encoders. X80 is used for the secondary feedback device in a dual-loop control system.

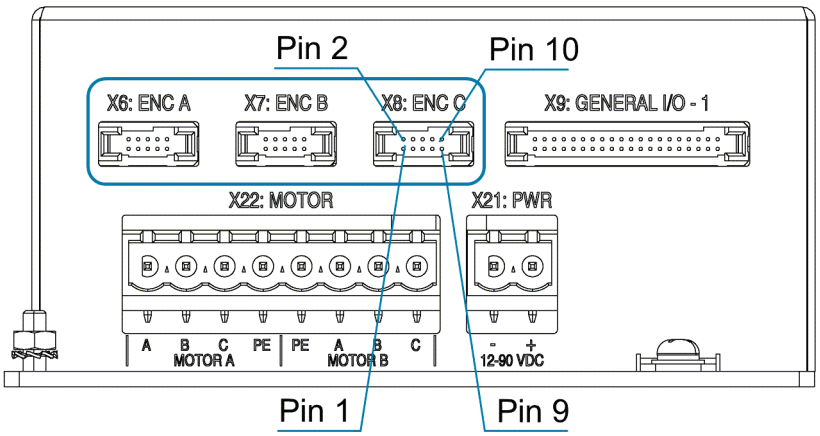

Figure 7: Encoder connectors

Note – pin assignments/supported encoders

Pin assignments are the same on all three connectors, except Sin/Cos is not available on connector X8 for encoder C.

Connectors X6/X7/X8: ENC

Pin #	Name	Encoder Types				Description
		AqB	Sin/Cos	BiSS-C	EnDat 2.2*	
1	5V					5V power supply (limited to 0.5A per connector)
2	GND					5V return and reference for differential signals
3	Encoder_1+			Clock+	Clock+	Clock+ pin for absolute encoders
4	Encoder_1-			Clock-	Clock-	Clock- pin for absolute encoders
5	Encoder_2+	A+	Sin+			A+ (for AqB) or sin+ (for analog sin/cos)
6	Encoder_2-	A-	Sin-			A- (for AqB) or sin- (for analog sin/cos)
7	Encoder_3+	B+	Cos+			B+ (for AqB) or cos+ (for analog sin/cos)
8	Encoder_3-	B-	Cos-			B- (for AqB) or cos- (for analog sin/cos)
9	Encoder_4+	Z+	Z+	Data+	Data+	Data+ for absolute encoders, or Z+ for both AqB and analog sin/cos encoder
10	Encoder_4-	Z-	Z-	Data-	Data-	Data- for absolute encoders, or Z- for both AqB and analog sin/cos encoder

* EnDat 2.2 is not supported in the standard FPGA version due to space constraints. The default production FPGA supports BiSS-C only. If you are interested in a FPGA version that supports EnDat 2.2, contact Technical Support.

Mating connector options	Samtec Inc. ISDF-05-D-M and CC03R-2830-01-G
Wiring	26 AWG, insulation rated for 100V

Note – Incremental encoder interface

Each differential-pair includes a built-in 120Ω terminator and the required hardware circuits to detect a disconnected encoder cable. When a disconnected encoder cable is detected, the controller will disable the motor. The detection is done on the A and B channels only (not on the index/Z-channel).
By default, the product does not support single-ended encoder. For use of single-ended encoder, contact Technical Support.

Note – 5V supply limitation

The 5V supply provided on each connector (X6, X7, and X8) is limited to 0.5A per connector.
The maximum current provided by all 5V power supplies combined is 1.5A.

3.4.7 Interface X25: Regeneration

Connector X25 is used to connect an external power resistor to dissipate energy generated by the motor, typically during deceleration. The motor-generated energy will charge up the internal capacitor. When the internal capacitor is fully charged, the bus voltage will increase. When bus voltage is higher than the operating limit of the product, it will trigger over-voltage protection and disable the motor. To prevent this from happening, users can connect an external power resistor to dissipate the unwanted energy.

Refer to the section *Regeneration* for more information.

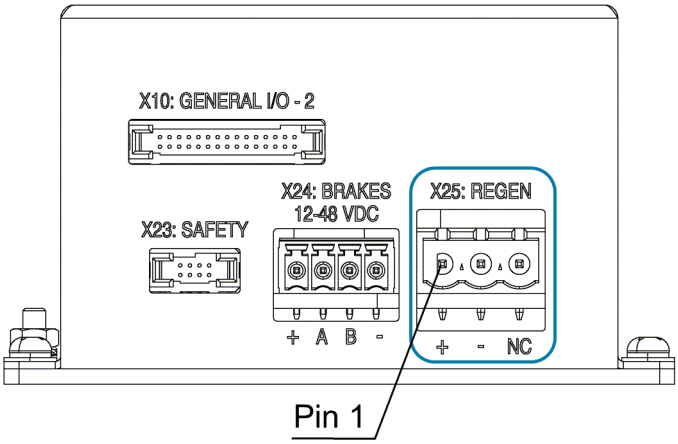

Figure 14. Regeneration Connector

Connector X25: REGEN

Pin #	Name	Description
1	Internal DC Bus	The internal DC bus power.
2	Regeneration	Regeneration pin to be connected to an external regeneration resistor. Limited to 16A. The external regeneration resistor must be connected between pins 1 and 2 of this connector.
3	Power GND	The return line for VIN. Do not connect or use this pin for the regeneration function.

Mating connector options	Degson Phoenix Contact	2EDGKF-5.08-03P-14-1000A 1779990
Pitch	5.08 mm	
Wiring	14–18 AWG, insulation rated for 300V	

3.4.8 Interface X2: Ethernet (LAN)

Connector X2 is an Ethernet communication port.

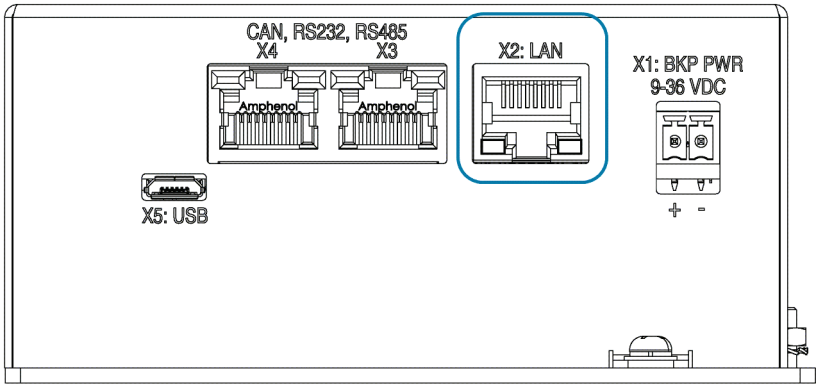

Figure 15: Ethernet Connector

Connector X13: LAN (Ethernet)

Pin #	Name	Description
1	TX+_D1	Transmit data +
2	TX-_D1	Transmit data -
3	RX+_D2	Receive data +
4	BI+_D3	Bi-directional +
5	BI-_D3	Bi-directional +
6	RX-_D2	Receive data -
7	BI+_D4	Bi-directional +
8	BI-_D4	Bi-directional -

Connector type	RJ45 LAN 10/100Base-T connector
Mating connector options	Any CAT5e compatible shielded connector
Cable	CAT5e or higher, standard Ethernet straight cable
Wiring	28/30 AWG, insulation rated for 100 V

3.4.9 Interfaces X3, X4: CAN, RS232, RS485

Connectors X3 and X4 are serial RJ45 communication ports.

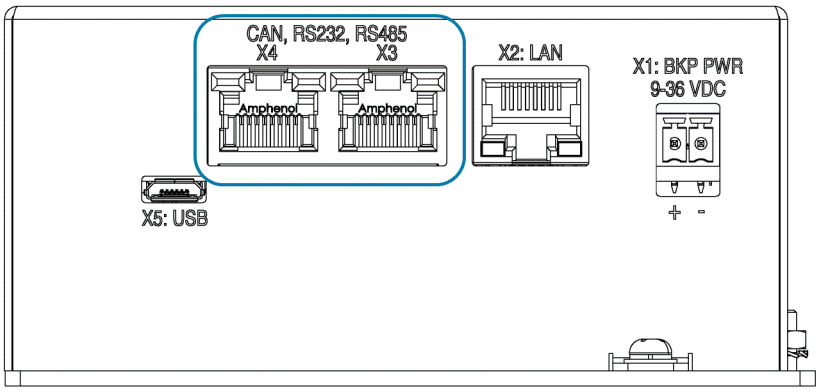

Figure 16: Serial Communication Connectors

Connector X3 and X4: CAN, RS232, RS485

Pin #	Name	Description
1	GND	Digital Ground
2	RS232_RX	RS232 input (product receive)
3	RS232_TX	RS232 output (product transmit)
4	RS485_B	RS485 bus, inverted
5	RS485_A	RS485 bus, not inverted
6	Sync	Reserved for future use
7	CAN_L	CAN bus, Low
8	CAN_H	CAN bus, High

Connector type	RJ45 LAN 10/100Base-T connector
Mating connector part number	Any CAT5e compatible shielded connector
Cable	CAT5e or higher, standard Ethernet straight cable
Wiring	28/30 AWG, insulation rated for 100V

Dual port connector

The serial port is a dual-port RJ45 connector. The two ports have identical pinouts and are interchangeable. Two ports are provided to support daisy chain connection of a CAN bus or RS485. It can be also used to connect two types of communication channels at the same time, instead of splitting a cable from a single RJ45 connector.

CAN bus and RS485 terminators

The CAN bus lines have an optional 120Ω terminator that is connected/disconnected by DIP switch #1 in the DIP software interface (on the top panel). Setting dip switch #1 to the ON position connects a 120Ω terminator between CAN_H and CAN_L. The terminator is required only in the last unit in the CAN bus chain.

The RS485 lines have a built-in (not optional) 120Ω terminator. Communication performance may be degraded if too many units are placed on the RS485 chain.

3.4.10 Interface X5: Micro-USB

Connectors X5 is a Micro-USB communication port.

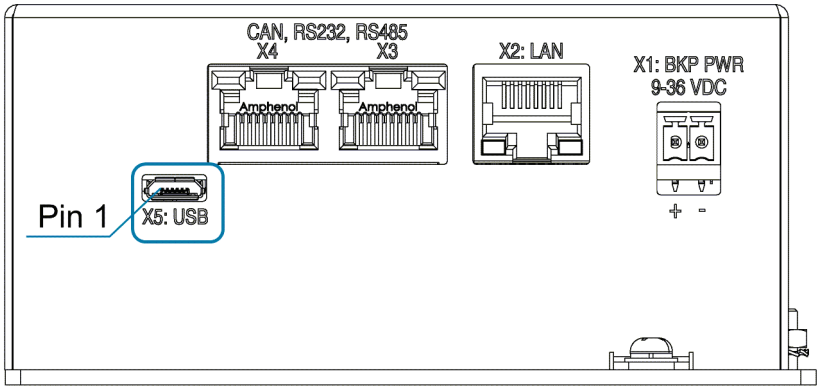

Figure 17: USB Connector

Connector X5: Micro USB

Pin #	Name	Description
1	Vcc	5V
2	D-	Data-
3	D+	Data+
4	ID	USB OTG ID
5	GND	GND

Connector type	Micro-USB 2.0 B
Cable	Any Micro-USB 2.0 B-type cable
Wiring	20–28 AWG, insulation rated for 100V

USB to RS232 bridge

The Micro-USB connection is implemented using an internal converter/adapter from USB to RS232 (UART). Typically, the Windows OS contains a built-in driver for the convertor/adapter. If necessary, you can access drivers at: http://www.ftdichip.com/Drivers/D2XX.htm.

3.4.11 Interface X9: General I/Os–1

Connector X9 is used for connecting external I/O devices to the AGD200.

For schematics and more information about these interfaces, refer to the section *I/O Interfaces – Circuitry*.

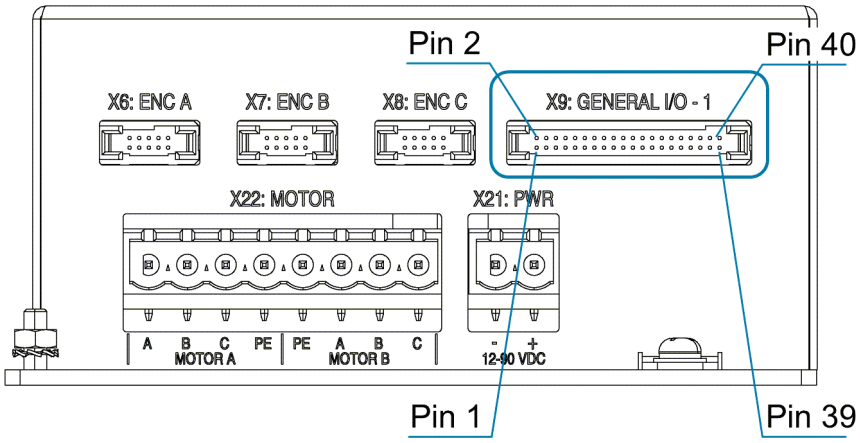

Figure 18: General I/O–1 connector

Connector X9: General I/Os - 1

Pin #	Function	Software Representation	Description
1	Digital_Output_Common_ Power (1 to 4)		Common power pin for isolated digital outputs 1 to 4
2	Digital_Output_Common_ Return (1 to 4)		Common power return pin for isolated digital outputs 1 to 4
3	Digital_Output_1	DOutPort.bit(0)	Isolated digital output 1, programmable sink or source
4	Digital_Output_2	DOutPort.bit(1)	Isolated digital output 2, programmable sink or source
5	Digital_Output_3	DoutPort (bit 2) DOutPort.bit(2)	Isolated digital output 3, programmable sink or source
6	Digital_Output_4	DOutPort.bit(3)	Isolated digital output 4, programmable sink or source
7	Digital_Input_Common (1 to 4)		Common pin (power or return, depending on external connection) for isolated digital inputs 1 to 4
8	Digital_Input_Common (5 to 8)		Common pin (power or return, depending on external connection) for isolated digital inputs 5 to 8
9	Digital_Input_1	DinPort.bit(0)	Isolated digital input 1 (NPN or PNP, depending on the connection of the group's common pin)
10	Digital_Input_2	DinPort.bit(1)	Isolated digital input 2 (NPN or PNP, depending on the connection of the group's common pin)
11	Digital_Input_3	DinPort.bit(2)	Isolated digital input 3 (NPN or PNP, depending on the connection of the group's common pin)

Pin #	Function	Software Representation	Description
12	Digital_Input_4	DinPort.bit(2)	Isolated digital input 4 (NPN or PNP, depending on the connection of the group's common pin)
13	Digital_Input_5	DinPort.bit(4)	Isolated digital input 5 (NPN or PNP, depending on the connection of the group's common pin)
14	Digital_Input_6	DinPort.bit(5)	Isolated digital input 6 (NPN or PNP, depending on the connection of the group's common pin)
15	Digital_Input_7	DinPort.bit(6)	Isolated digital input 7 (NPN or PNP, depending on the connection of the group's common pin)
16	Digital_Input_8	DinPort.bit(7)	Isolated digital input 8 (NPN or PNP, depending on the connection of the group's common pin)
17	Digital_Input_9	DinPort.bit(8)	Isolated digital input 9 (NPN or PNP, depending on the connection of the group's common pin)
18	Digital_Input_Common (9 to 11)		Common pin (power or return, depending on external connection) for digital inputs 9 to 11
19	Digital_Input_11	DinPort.bit(10)	Isolated digital input 11 (NPN or PNP, depending on the connection of the group's common pin)
20	Digital_Input_10	DinPort.bit(9)	Isolated digital input 10 (NPN or PNP, depending on the connection of the group's common pin)
21	5V supply for external I/O circuits		Limited to 0.5A
22	GND		GND for 5V and differential signals
23	5V supply for external I/O circuits		Limited to 0.5A
24	GND		GND for 5V and differential signals
25	+VA (15V)		Low current +15V supply for external analog circuits
26	-VA (-15V)		Low current +15V supply for external analog circuits
27	Analog_Output_1	AOutPort[1]	±12V, 16 bit
28	Analog_Output_1_Return		
29	Analog_Output_2	AOutPort[2]	±12V, 16 bit
30	Analog_Output_2_Return		Must connect to GND if analog input is single-ended.
31	Analog_Output_3	AOutPort[3]	±12V, 16 bit
32	Analog_Output_3_Return		
33	Analog_Output_4	AOutPort[4]	±12V, 16 bit
34	Analog_Output_4_Return		
35	Analog_Input_1	AInPort[1] AInPort[5]	±12V, 12 bit

Pin #	Function	Software Representation	Description
36	Analog_Input_1_Return		Must connect to GND if analog input is single-ended.
37	Analog_Input_2	AInPort[2] AInPort[6]	±12V, 12 bit
38	Analog_Input_2_Return		Must connect to GND if analog input is single-ended.
39	Analog_Input_3	AInPort[3] AInPort[7]	±12V, 12 bit
40	Analog_Input_3_Return		Must connect to GND if analog input is single-ended.

Mating connector options	Samtec ISDF-20-D-M and CC03R-2830-01-G
Wiring	28/30 AWG, insulation rated for 100V

3.4.12 Interface X10: General I/Os–2

Connectors X10 is used for connecting external I/O devices to the AGD200.

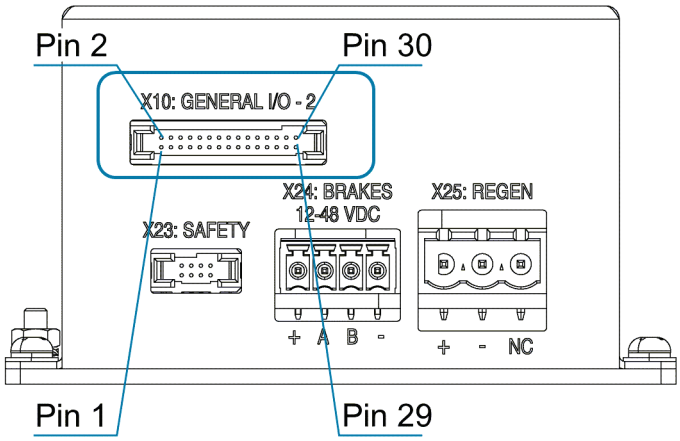

Figure 19: General I/O–2 connector

Connector X10: General I/Os – 2

Pin #	Name	Software Representation	Description
1	Analog_Input_4	AInPort[4] AInPort[8]	±12V, 12 bit
2	Analog_Input_4_Return		Must connect to GND if analog input is single-ended
3	Digital_Input_12	DInPort.bit(11)	Isolated digital input 12 (NPN only)
4	Digital_Input_12_Return		Isolated digital input 12 return
5	Differential_Input_1+	DInPort.bit(14)	Differential input 1+| Axis A pulse input+
6	Differential_Input_1-		Differential input 1- | Axis A pulse input-
7	Differential_Input_2+	DInPort.bit(15)	Differential input 2+| Axis A direction input+
8	Differential_Input_2-		Differential input 2- | Axis A direction input-
9	Differential_Input_3+	DInPort.bit(16)	Differential input 3+| Axis B pulse input+
10	Differential_Input_3-		Differential input 3- | Axis B pulse input-
11	Differential_Input_4+	DInPort.bit(17)	Differential input 4+| Axis B direction input+
12	Differential_Input_4-		Differential input 4- | Axis B direction input-
13	Differential_Input_5+	DInPort.bit(18)	Differential input 5+| Axis C pulse input+
14	Differential_Input_5-		Differential input 5- | Axis C pulse input-
15	Differential_Input_6+	DInPort.bit(19)	Differential input 6+| Axis C direction input+
16	Differential_Input_6-		Differential input 6- | Axis C direction input-
17	Differential_Input_7+	DInPort.bit(20)	Differential input 7+
18	Differential_Input_7-		Differential input 7-
19	Differential_Input_8+	DInPort.bit(21)	Differential input 8+
20	Differential_Input_8-		Differential input 8-
21	Differential_Output_5+	DOutPort.bit(4)	Differential output 1+
22	Differential_Output_5-		Differential output 1-
23	Differential_Output_6+	DOutPort.bit(5)	Differential output 2+
24	Differential_Output_6-		Differential output 2-
25	Differential_Output_7+	DOutPort.bit(6)	Differential output 3+
26	Differential_Output_7-		Differential output 3-
27	Differential_Output_8+	DOutPort.bit(7)	Differential output 4+
28	Differential_Output_8-		Differential output 4-
29	GND		GND for differential I/Os
30	GND		GND for differential I/Os

Mating connector options	Samtec ISDF-15-D-M and CC03M-2830-01-G
Wiring	28/30 AWG, insulation rated for 100V

3.4.13 I/O Interfaces – Circuitry

Hall Sensors

Motor Hall sensors can be connected to the general purpose opto-isolated digital inputs on connector X9 (General I/O-1). The Hall sensors must be connected to three consecutive inputs (such as 2, 3 and 4). The first input mode must be configured to mode 23-Hall A.

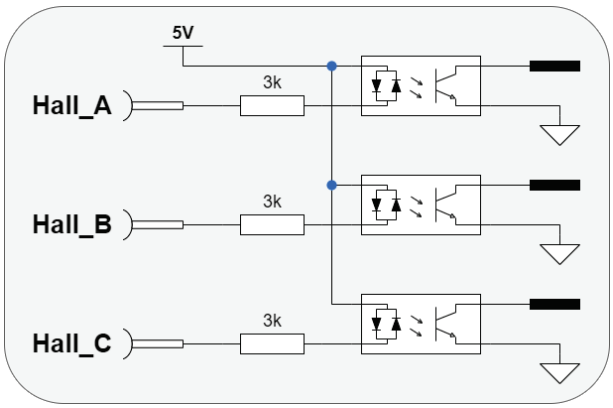

Figure 20. Motor Hall sensors

- It is recommended that Hall sensors be used with incremental encoders. Typically, Hall sensors are called Ha-Hb-Hc, or Hu-Hv-Hw, or H1-H2-H3, which correspond to the motor phases. A typical Hall sensor is an open collector (NPN) type and requires a 5 VDC power supply.
- Any three consecutive digital inputs can be used as Hall sensor inputs.
- Motor Hall sensors are wired as standard digital inputs.

Isolated Digital Inputs

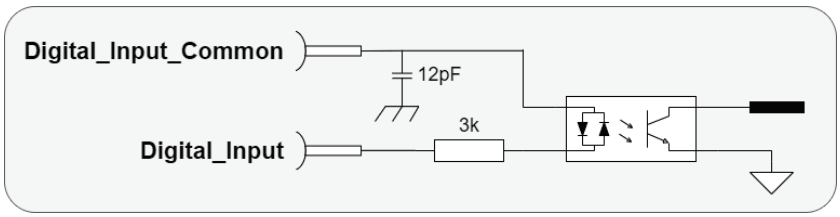

Figure 21. Isolated digital inputs

- Isolated digital inputs are organized as groups with a dedicated common pin. This enables connection to different voltage supplies. Each group is fully isolated and independent of the other groups.
- The AGD200 has three groups of inputs: digital inputs 1 to 4, digital inputs 5 to 8, and digital inputs 9 to 11.
- Each group can be connected as NPN or PNP interfaces, depending on the wiring of the group's common pin. If the common pin is connected to power (5V to 28V), then the inputs of this group can be used with external NPN devices (external current sinking devices). If the common is connected to the GND of some external power, then the inputs can be used with external PNP devices (external current sourcing devices).
- The input circuit of the opto-couplers includes two diodes. This enables use as NPN or PNP.

- One group can be wired to interface external NPN devices and another group can be wired to interface PNP devices. However, within a group, all interfaces (NPN or PNP) must be the same, as they are based on the connection of the group's common pin.

Isolated Digital Outputs

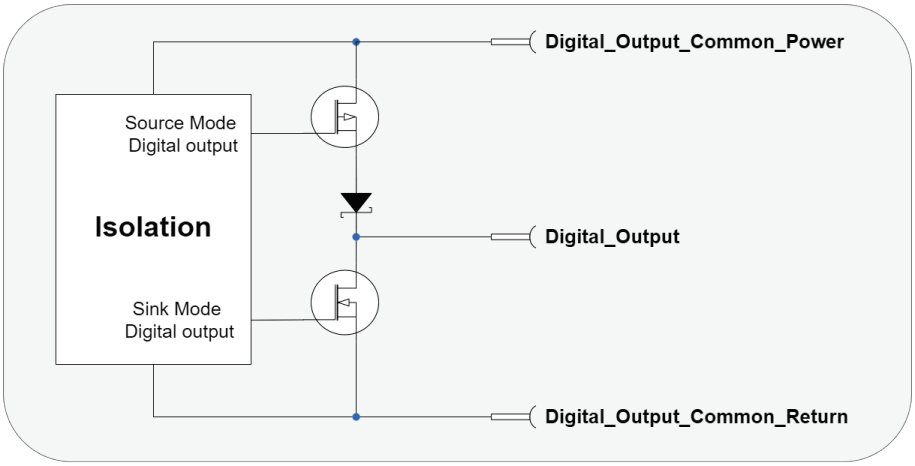

Figure 22. Isolated digital outputs

- The digital output interface circuit is identical for all 4 outputs.
- Each output can be programmed (by a software parameter) to act as a current sourcing output (up to 300mA) or as a current sinking output (up to 500mA).
- Digital_Output_Common_Power is shared by all 4 outputs.
- The outputs are designed for resistive loads. For inductive loads, an external flyback diode is required.
- Digital outputs specifications:
  - Digital_Output_Common_Power voltage range is between 5V and 28V.
  - Maximal load current, per each output:
    Sink mode, any Digital_Output_Common_Power voltage: 500 mA
    Source mode, at 24V Digital_Output_Common_Power: 300 mA
    Source mode, at 5V Digital_Output_Common_Power: 60 mA (see Note below)

Note – 5V Digital_Output_Common_Power source mode limitation.

When using 5V Digital_Output_Common_Power, higher current (but less than the absolute maximum value of 250 mA) can be driven. However, the output high voltage will drop significantly. To maintain output high voltage at >4.5V, limit the current to 60 mA.

Analog Input

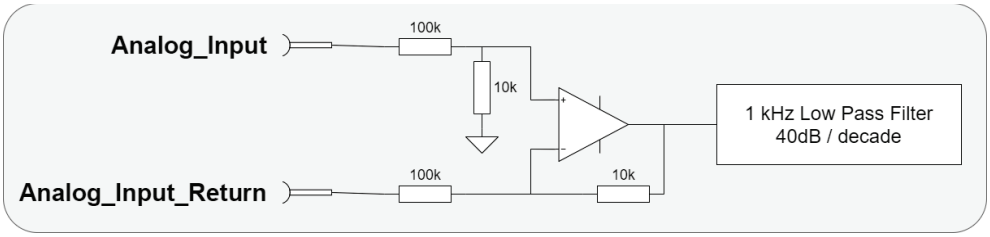

Figure 23. Analog inputs

- The electrical interfaces of analog inputs 1, 2, 3, and 4 are identical.
- The analog input range is -12V to +12V, and resolution is 16 bits.
- The analog input is designed for standard differential analog input, with a simple input circuit, having an input resistance of ~60 kΩ.
- For single-ended analog inputs, be sure to connect the return line to GND. Do not leave it unconnected.
- Input circuit bandwidth: 1 kHz, -40 dB/decade
- The controller software provides the following parameters to control the analog input reading:
  - Filter
  - Offset
  - Deadband
  - Gain

Analog Output

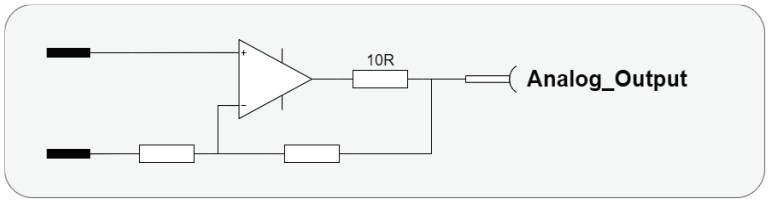

Figure 24. Electrical Interfaces – Analog Output 1 to 2

- The electrical interfaces of all analog outputs are identical.
- The analog output range is from -12V to +12V, with resolution of 16 bits.
- Output resistance is 10Ω.
- Output current is up to ±2mA, without internal current limitation.
- Analog outputs are controlled by the controller software in few operational modes:
  - Analog output controlled by the user program for a general purpose.
  - Analog output reflects the internal value of a user selected parameter (position, position error, velocity, current, or any parameter/status of the controller), with a user defined scaling factor, for easy monitoring using an external oscilloscope.

Differential Inputs

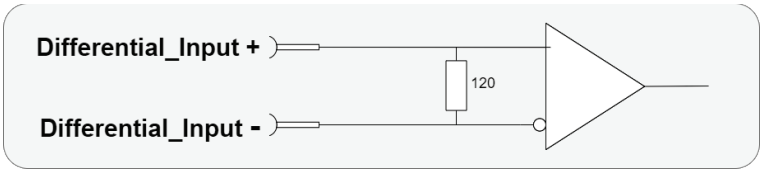

Figure 25. Differential inputs

- Differential inputs use two complementary signals (Differential_Input+ and Differential_Input-) to receive information.
- The same electrical signal is sent as a differential pair, each in its own conductor. The pair is wired as a twisted pair.
- The differential inputs in the AGD200 are implemented according to the RS422 standard.
- Each differential input has a 120Ω terminator.

Differential Outputs

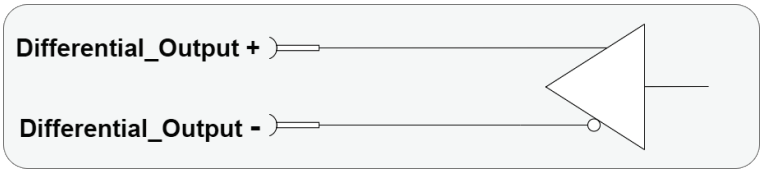

Figure 26. Differential outputs

- Differential outputs use two complementary signals (Differential_Output+ and Differential_Output-) to receive information.
- The same electrical signal is sent as a differential pair, each in its own conductor. The pair is wired as a twisted pair.
- The differential outputs in the AGD200 are implemented according to the RS422 standard.
- The differential outputs are inactive during power on, until they are controlled by the drive firmware and the user parameters.

3.4.14 DIP Switches

The AGD200 includes 8 DIP switches to define CAN or Ethernet address offset, to connect a 120Ω CAN terminator resistor, to activate firmware download mode, and set other functions. These are hardware configurations that are typically done only once, during product installation. The DIP switches are located inside the product housing, and are not generally used.

The value of the DIP switches, as read by the controller during power on (or reset), can be queried using ADebugData[4] in Agito PCSuite terminal.

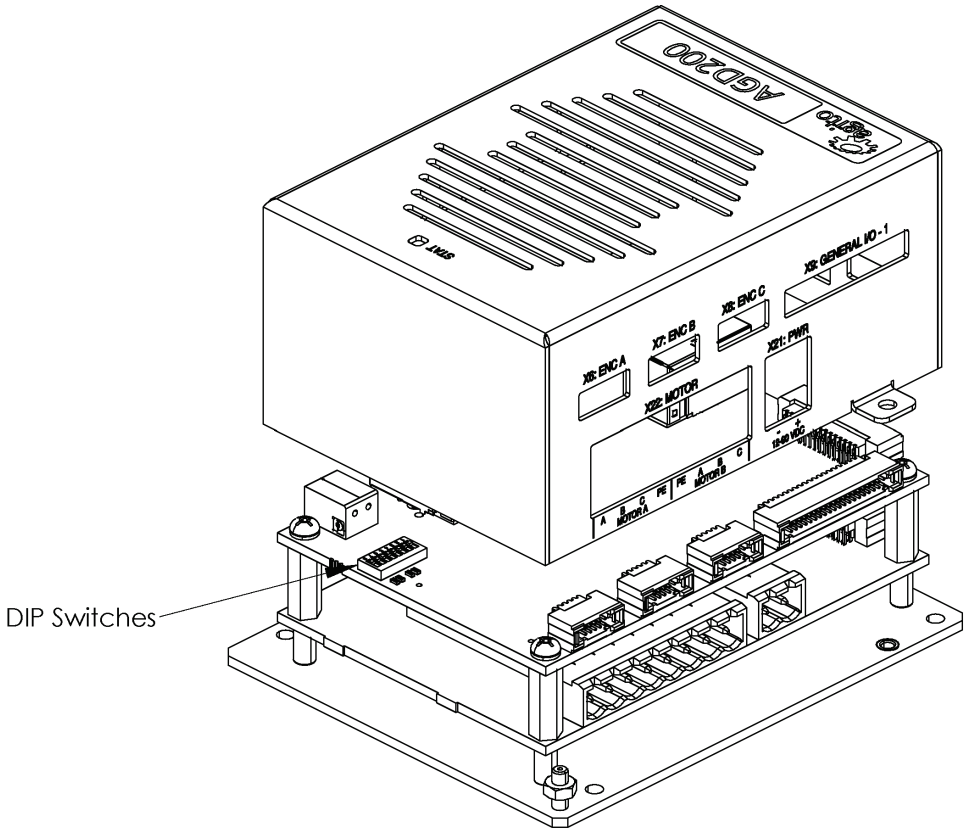

Figure 27: DIP switches

DIP Switches

DIP Switch #	Function	Description
1	CAN Bus Terminator	Set to ON to connect 120Ω terminator resistor. Only the last unit in the CAN network needs to have this set to ON.
2	Force Download Firmware	Set to ON and power cycle to force the product into firmware download mode. Otherwise, always keep in OFF state.
3	Force Communication to Default	Forces the controller to default communication parameters (bypassing other software parameters in the controller): Ethernet IP: 172.1.1.101 Ethernet Port: 50000 CAN Address: 64 CAN and RS232/USB baud rates are not affected by this DIP switch. Requires power cycle or reset.

DIP Switch #	Function	Description
4-6	CAN/Ethernet Address Offset DIP Switch 4 – Most significant bit DIP Switch 6 – Least significant bit	DIP switches 4-5-6 create a three-bit value. For example, if DIP switch 4 is set to ON (value of 1), and 5 and 6 are set to OFF (value of 0), the result is: 100 (binary), meaning a value of 4. This value (referred to as offset) is used to define the drive's CAN bus address and Ethernet IP address as follows: Ethernet IP: the actual fourth number of the IP address is equal to: EthernetIP [4] + offset CAN address: the actual CAN address of the unit is equal to: CANAddr + offset * 16 Note: Requires power cycle or reset.
7	Reserved for Future Use	Always keep at OFF state.
8	Reserved for Future Use	Always keep at OFF state.

3.4.15 Status LED

A bi-colored LED, marked STAT shows the status of the AGD200.

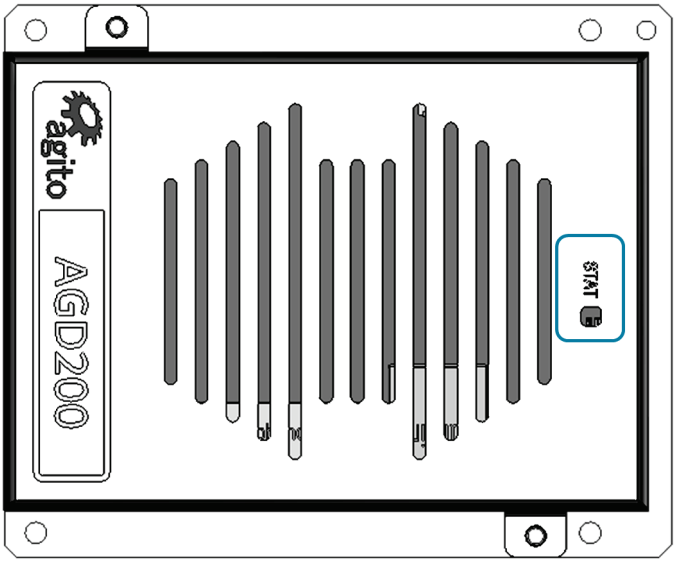

Figure 28: STAT LED indicator

STAT - Status LED indicator

Color	LED	Meaning
	Off	Powered off
Red	On steady	Fault
Green	On steady	Normal operation
Green	Blinking fast	In Boot mode
Green	Blinking slow	Firmware download in progress

4 Operation

4.1 Motor Configuration

This manual uses the product with a linear DC brushless motor as an example for illustration of the configuration and operation. For advanced configuration and operation, refer to the respective software manuals.

1. Connect the product to power supply, motor, encoder and other I/Os according to the descriptions in the *Electrical Interfaces* section.

   Make sure the safety port is connected before any operation.

2. Open Agito PCSuite software. Select CFG in CONFIG below and setup the parameters as follows:

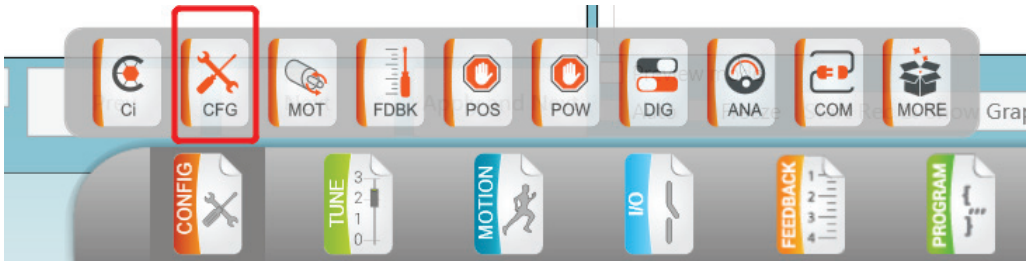

Figure 29. Configuration

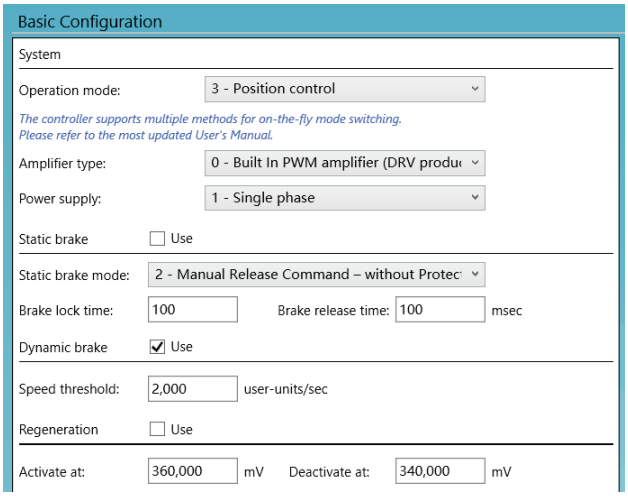

Figure 30. Operation Mode Configuration

3. Click **Next** and set the motor type and number of pole pairs according to the test motor.

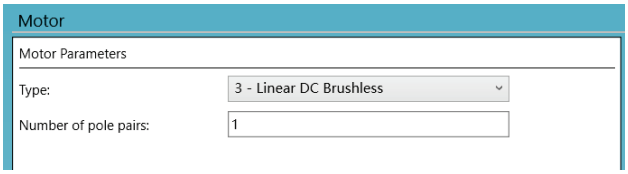

Figure 31. Select Motor Type

4. Click **Next** to setup the position feedback parameters. The definition of **Resolution** depends on the motor and encoder type. For rotary motor and rotary encoder, it is the number of encoder counts per mechanical revolution. For linear motor, it is the number of encoder counts per magnetic pitch (one pole-pair).

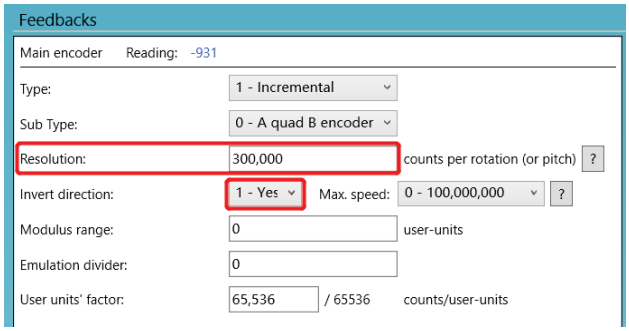

Figure 32. Feedback Parameters

The value of **Invert direction** affects commutation of the motor. The encoder must be moving in the positive direction during auto-phasing process.

5. Click **Next** to setup position, velocity and motor stuck protection. Fill in the limits according to the application requirements.

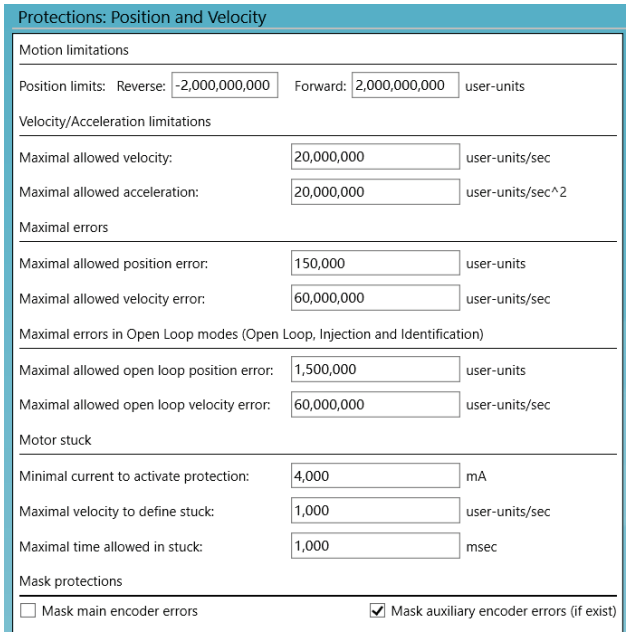

Figure 33. Position and Velocity Protection

6. Click **Next** to configure current and voltage limits. It is important to refer to motor's specifications. The limits entered here must be within the motor operating limits to avoid damaging the motor.

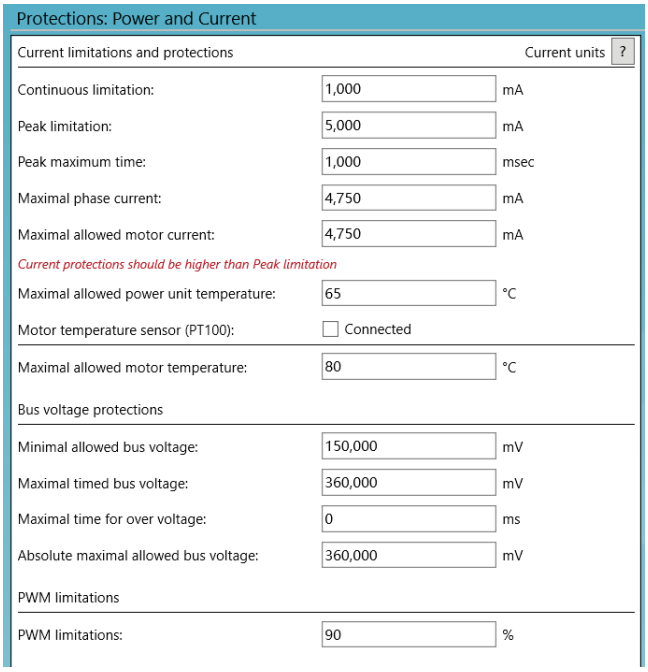

Figure 34. Current and Voltage Protection

4.2 Drive/Motor Overload Protection

The following methods are used to protect the AGD200 from overload:

- I2T
- Motor stuck

4.2.1 I2T

In a transient condition, the motor can sustain a certain amount of energy that exceeds the continuous limit. However, the more the current value exceeds the continuous current, the less time the current value can be sustained, and vice versa.

If the maximal energy level is surpassed, the maximal current is limited to the continuous current, instead of being limited to the peak current as usual.

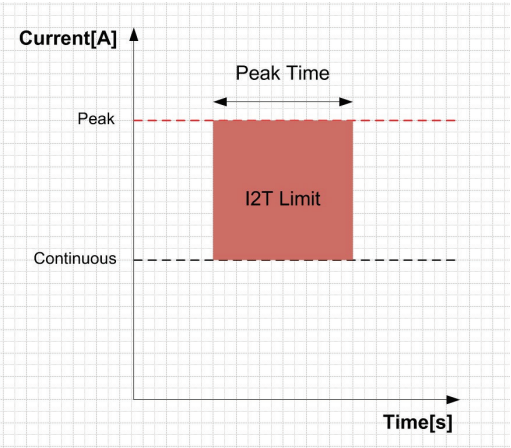

Figure 35. I2T

Operation

In Agito PCSuite, the following parameters define the I^2T characteristics:

- Peak current
- Continuous current
- Peak time

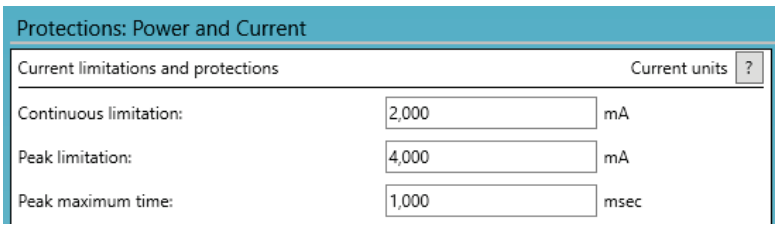

Figure 36. I2T Settings

Note – The I2T algorithm does not support thermal memory protection or thermal memory during power loss.

On drive power-up, the algorithm does not consider the amount of energy supplied to the motor prior to power-up.

Note – The I2T algorithm does not consider motor speed. Therefore, the product does not support thermal speed sensitivity.

4.2.2 Motor Stuck

Motor stuck indicates whether or not the motor is in fact stuck. The condition is strongly dependent on the application.

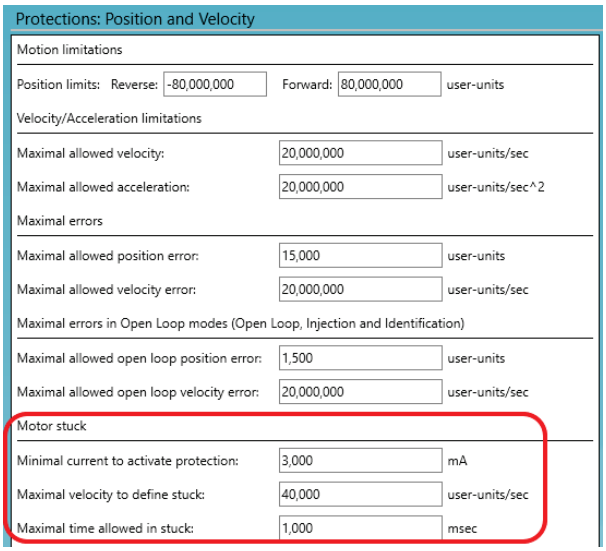

Figure 37. Motor Stuck Settings

The protection feature monitors and responds to a condition in which the amplifier is providing a certain amount of minimal current (StuckCurr), but the motor does not move at the minimal expected speed (StuckVel) for a certain amount of time (StuckTime). If this condition occurs, the motor will be shut off.

4.3 Tuning

4.3.1 Commissioning

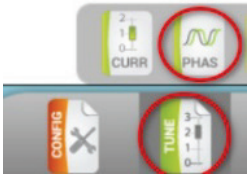

This step is required only for brushless motor.

Select TUNE > PHAS. in the tune option.

Configure the main encoder resolution. For Auto-Phasing mode, select **Automatic upon power on** if the application allows “shake and wake” upon power up. If not, select **Automatic upon MotorOn (if needed)** to “shake and wake” only when the motor is ready for motor on.

Use **Jump to zero phase** for Auto-Phasing method for most reliable result. This method requires the longest search distance.
If the stroke does not allow such search distance, select **Minimal Motion** method.

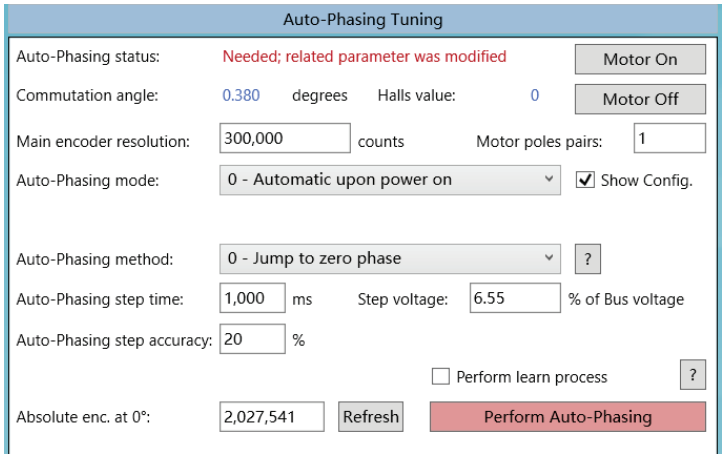

Figure 38. Auto-Phasing for Brushless motor

If the system does not allow any motion during power-on or motor-on, use Hall sensors for commutation phasing.

1. Connect Hall sensors to HALLS port and configure the first of the three inputs in the digital I/O page as **Hall A**.
2. Use the **Jump to zero phase** method to establish the motor and Hall phases; select **Perform learn process** and click **Perform Auto-Phasing**.
3. After the auto-phasing is completed successfully, change the Auto-Phasing method to **Encoder with Halls/Encoder switching** and save all parameters to flash. After reset or power cycle of the controller, auto-phasing will be done by Hall sensors.

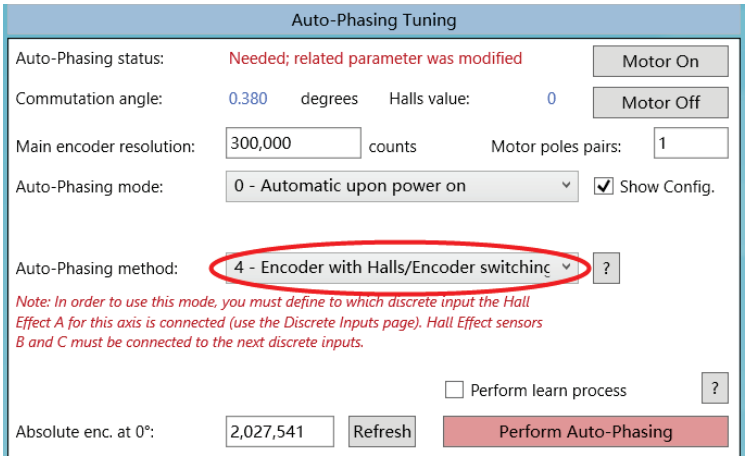

Figure 39. Using Hall Sensors to Avoid "Shake and Wake"

4.3.2 Current Loop Tuning

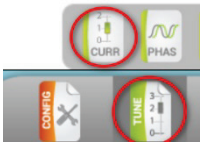

Select TUNE > CURR.

Enter motor's phase resistance and phase inductance according to the motor's datasheet and enter the desired current loop bandwidth for this axis. Typically, 1000 Hz is suitable for most applications.

Click **Calculate PI** to calculate the current loop gains.

Check both checkboxes for auto data recording and user predefined data recording.

Click **Apply Current Command** to test the current loop performance.

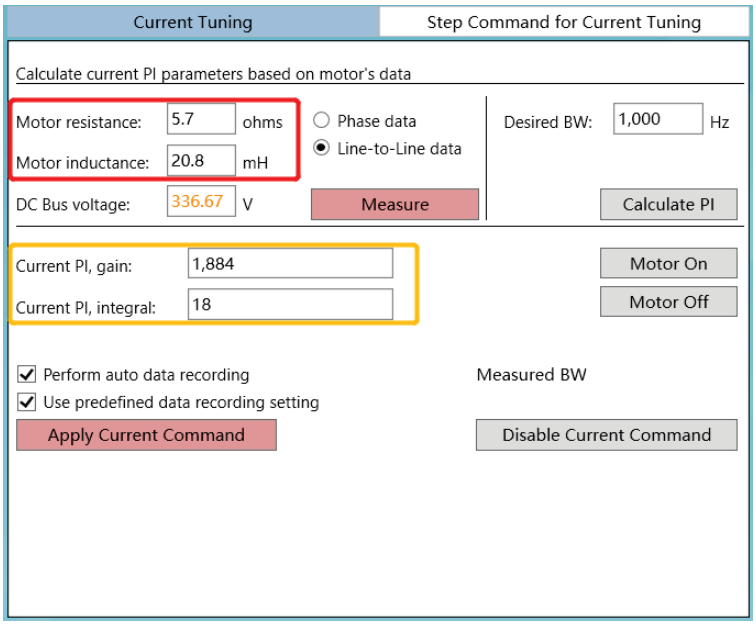

Figure 40. Current Loop Tuning

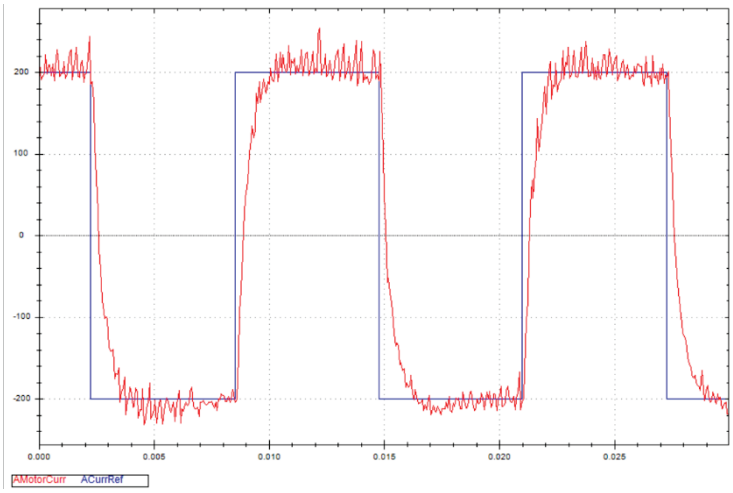

Figure 41 Typical Current Loop Performance

4.3.3 Auto Velocity and Position Loop Tuning

1. System Identification.

   Select TUNE > IDEN.

   Click **Begin Identification** to perform system identification.

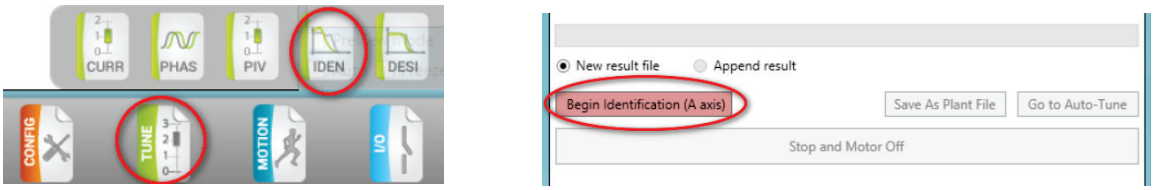

Figure 42. Begin System Identification

When the identification is completed successfully, the plant's transfer function will be displayed, as shown in the following figure.

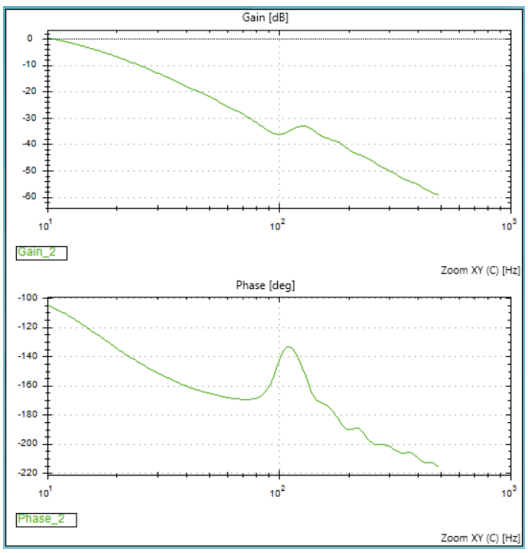

Figure 43. Typical Plant Transfer Function

2. Click **Go to Auto-Tune**. Alternatively, select TUNE-> DESI to open the Auto-Tuning (controller design) page.

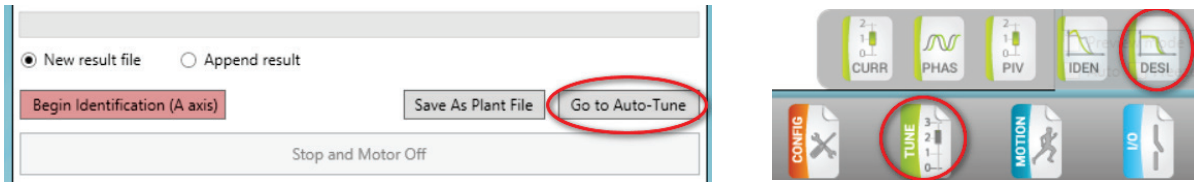

Figure 44. Go to Auto-Tuning page

3. Click Run Auto-Tune to start Auto-Tuning. It will take a few seconds, or longer for more complex systems, to calculate the optimum PIV gains for this plant.

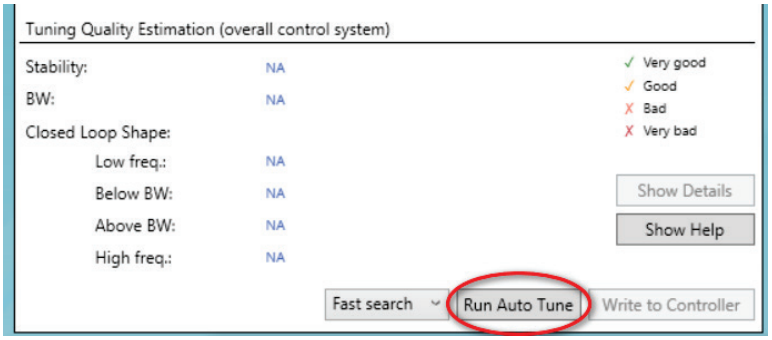

Figure 45. Start Auto-Tuning calculation

4. Once Auto-Tuning is completed, click **Write to Controller** to download the calculated gains into the controller.

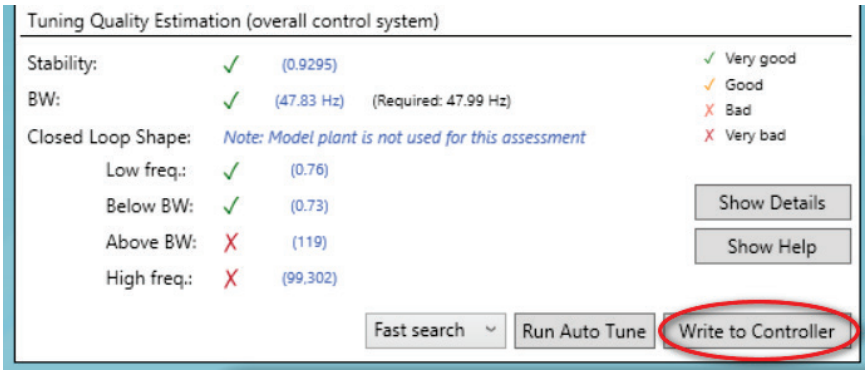

Figure 46. Download the parameters to the controller

5. Check the motion performance in the Motions Tab, set the required motion profile, and click **Go 1** or **Go 2** to move to Target 1 or Target 2. Record the motion data to analyze the motion performance in detail.

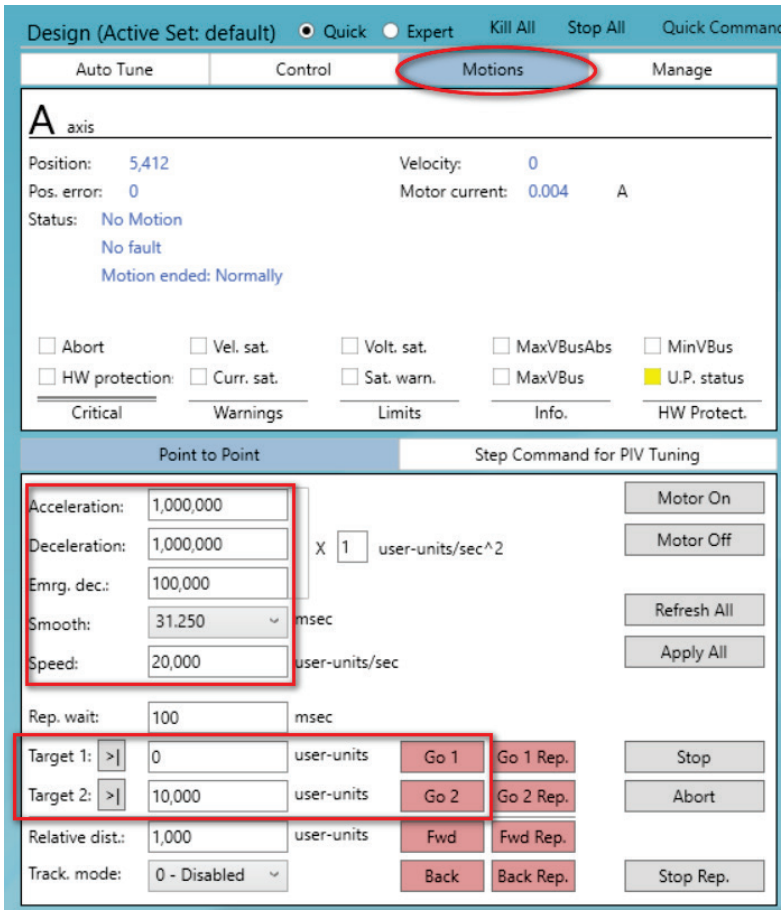

Figure 47. Testing Motion

4.3.4 Manual Velocity and Position Loop Tuning

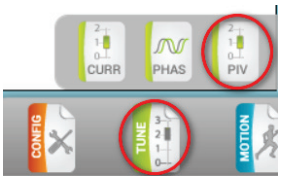

Select TUNE > PIV.

Adjust the proportional (PI, gain) and integral (PI, integral) gains of velocity loop.

Click **Apply Vel Command** to check the performance.

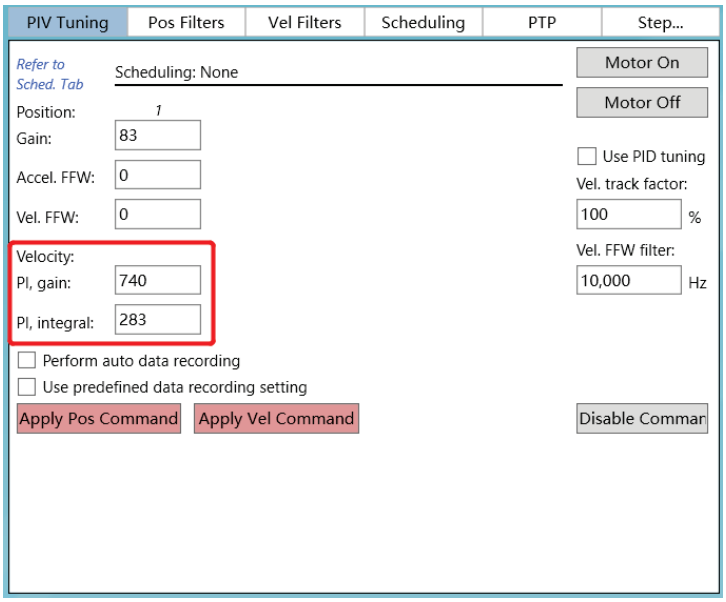

Figure 48. Manual Velocity Loop Tuning

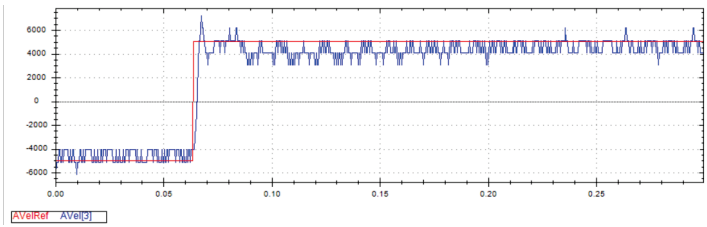

Figure 49. Typical Velocity Loop Performance

Similarly, adjust proportional gain of position loop.

In addition, adjust acceleration and velocity feedforward to improve performance.

Click **Apply Pos Command** to check performance.

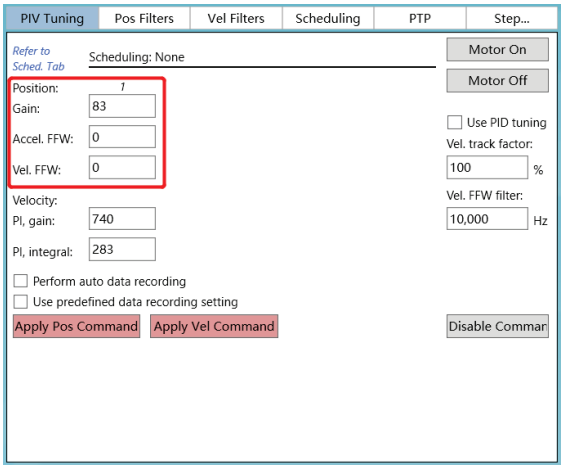

Figure 50. Position Loop Tuning

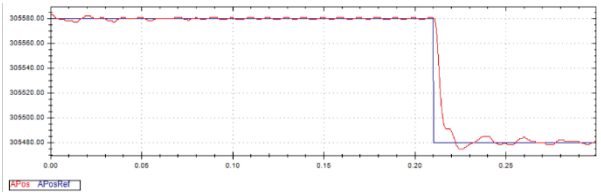

Figure 51. Typical Position Loop performance

Repeat the configuration and tuning steps for all the axes connected to the product.

Finally, test the motion according to the required motion profile, as shown in Figure 47. Testing Motion.

5 Maintenance and Servicing

5.1 Troubleshooting

Condition	Potential Cause	Possible Resolution
Power is On but no LED light	Power connector is loose	Check power connector, measure power supply voltage using a voltmeter.
	Firmware is corrupted	Turn on DIP switch #2, power cycle, and download firmware using Agito PCSuite.
Motor is oscillating or out of control (free wheel)	The position feedback sensor (encoder) is faulty or disconnected	Check wiring.
	Position feedback sensor is configured in wrong direction	Go to Agito PCSuite's CONFIG > FDBK page, toggle the **Invert direction** setting.
	Encoder signal is interfered by EMI noise in the system, resulting in lost counts or incorrect position feedback	Verify if the encoder signal is drifting even when the motor is physically locked or not moving. Check electrical grounding, shielding and PE in the system to ensure there are no ground-loop in the system. Set EncFilt from Agito PCSuite's CONFIG > FDBK page to a frequency setting that is just above the required motion speed.
	Control loops' gains are too high	Go to Agito PCSuite's Tune page, select CURR and/or PIV page to reduce the gains to half. If the situation improved, redo tuning for the axis.
	Velocity or Acceleration command is set too high	Reduce the acceleration, deceleration, smooth and speed setting.
	Noise introduced in calculation of velocity from position feedback	Add a software low pass filter from Agito PCSuite's TUNE > PIV, Velocity Filters tab.
	Mechanical resonance.	Add a software low pass filter from Agito PCSuite's TUNE > PIV, Velocity Filters tab. Do advanced auto tuning to allow Agito PCSuite identify and apply a suitable filter. Perform TUNE > IDEN and TUNE > DESI (Expert > Expert Tune mode for best result).
Cannot achieve the required speed	Acceleration and/or deceleration and/or speed is set too low, or smooth is set too high.	Adjust acceleration, deceleration and smooth settings.
	Current and voltage limits are set too low	Check current limits are according to motor's datasheet and maxPWM, under CONFIG->POW page, is set to between 90% and 95%.
	Improper control loops gains	Re-tune the motor
	The load inertia or friction is too high for the motor	Check motor and driver sizing for this axis to ensure the motor force, current and voltage of power supply is sufficient to achieve the motion.

Condition	Potential Cause	Possible Resolution
	Auto-phasing is inaccurate	Check that hall sensors and encoder signal are functional and not interfered by EMI in the system. And redo auto-phasing.
Motor does not respond to a command	The axis is stopped by FLS/RLS position limit sensor or limited by software position and velocity limits.	Check if FLS and RLS of the motor is active. Or it could be a wrong setting where another sensor is configured wrongly as the FLS or RLS of this motor. Check software position limits and velocity limits at Agito PCSuite's CONFIG > POS page. If the FLS or RLS signal is active when the digital input is changed, the FLS or RLS status will remain ON. In this case, set the digital input to FLS or RLS, manually move the motor away from the sensor before change the digital input function. Alternatively, reset the controller or power cycle the controller.
	The axis is configured in a wrong operating mode or function, e.g. as a slave axis or another master.	Check all motion related configurations.
	Motor connector is loose.	Check motor power connection.
	The motor is faulty.	Measure motor's resistance and inductance at Agito PCSuite's TUNE > CURR page to check if the resistance and inductance values are close to the motor specification.
	If this is an actuator with ballscrew, timing belt or other transmission, the coupling or other mechanical part may be loose.	Check all mechanical transmission parts and mechanism.
	Motor brake is engaged	Check brake wiring and power supply.